SPECIAL BOARD MEETING AGENDA
ALTERNATE MEETING ROOM
3582 SOUTH WINERY AVENUE
FRESNO, CALIFORNIA 93725
Monday, July 31, 2023 at 6:00PM

In compliance with the Americans with Disabilities Act, if you need special assistance to participate in a District Board Meeting, please contact the District Office at 559-485-7353 at least 48 hours prior to the meeting, to ensure that reasonable arrangements can be made to provide accessibility to the meeting.

- Public comments are limited to three (3) minutes or less per individual per item, with a fifteen (15) minute maximum per group per item and will be heard during the communication portion of the agenda.

1. **Call to Order:**

2. **Roll Call:** President Charles Garabedian, Jr.; Vice President Salvador Cerrillo; Director Irma Castaneda; Director Frank Cerrillo, Jr.; Director Carlos Tovar, Jr.

3. **Certification:** Certification was made that the Board Meeting Agenda was posted 24 hours in advance of the meeting.

4. **Old Business:**

   a. **Solar Project.** Clarification is needed regarding the plans that were presented in the previous board meeting of July25. Potential amendments to the project for discussion and cannot wait for the next board meeting.

   Recommended action: board's pleasure.

5. **New Business:** *None for this meeting.*

6. **Communications:**

   a. Public Comment:

7. **Closed Session:**

8. **Adjournment:**

Motion by: _____, Second by: _____

Certification of Posting

I, Norma Melendez, District Clerk of the Malaga County Water District, do hereby certify that the foregoing agenda for the Special Board Meeting of the Board of Directors of July 31, 2023, was posted for public view on the front window of the MCWD office at 3580 S. Frank Street, Fresno Ca 93725, at 5:00P.M. On 07/28/2023.

Norma Melendez

MALAGA CWD - COMMUNITY PARK & RECREATION CENTER - SOLAR PROJECT

3582 S WINERY AVE
FRESNO, CA 93725

CALL 811 DIG ALERT PRIOR TO EXCAVATING:

COMPLIANCE WITH GOVERNMENT CODE 4216 IS TO BE FOLLOWED PRIOR TO ANY EXCAVATION TAKING PLACE.

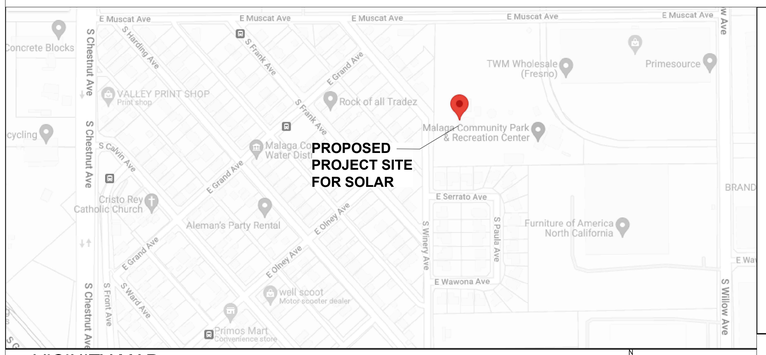

VICINITY MAP

N SCALE NTS

GOVERNING CODES:

CALIFORNIA CODE OF REGULATIONS:
2022 CALIFORNIA ADMINISTRATIVE CODE (CAC) ..... (PART 1, TITLE 24, CCR)
2022 CALIFORNIA BUILDING CODE (CBC), VOLUMES 1, AND 2 (PART 2, TITLE 24, CCR)
(2018 EDITION INTERNATIONAL BUILDING CODE WITH 2019 CALIFORNIA AMENDMENTS)
2022 CALIFORNIA ELECTRICAL CODE ..... (PART 3, TITLE 24, CCR)
(2017 EDITION NATIONAL ELECTRICAL CODE WITH 2019 CALIFORNIA AMENDMENTS)
2022 CALIFORNIA MECHANICAL CODE (CMC) ..... (PART 4, TITLE 24, CCR)
(2018 EDITION IAPMO UNIFORM MECHANICAL CODE WITH 2019 CALIFORNIA AMENDMENTS)
2022 CALIFORNIA PLUMBING CODE (CPC) ..... (PART 5, TITLE 24, CCR)
(2018 EDITION IAPMO UNIFORM PLUMBING CODE WITH 2019 CALIFORNIA AMENDMENTS)
2022 CALIFORNIA ENERGY CODE ..... (PART 6, TITLE 24, CCR)
(2018 EDITION CALIFORNIA ENERGY COMMISSION BUILDING ENERGY EFFICIENCY STANDARDS)
2022 CALIFORNIA FIRE CODE (CFC) ..... (PART 9, TITLE 24, CCR)
(2018 EDITION OF INTERNATIONAL FIRE CODE WITH 2019 CALIFORNIA AMENDMENTS)
2022 CALIFORNIA GREEN CODE ..... (PART 11, TITLE 24, CCR)
2022 CALIFORNIA REFERENCED STANDARDS CODE ..... (PART 12, TITLE 24, CCR)
NFPA 13 - 2022
NFPA 72 - 2022

REFERENCE CODE SECTIONS FOR APPLICABLE STANDARDS:

2022 CBC, CHAPTER 35
2022 CFC, CHAPTER 80

INSPECTIONS:

SAFETY DURING CONSTRUCTION TO COMPLY WITH 2022 CFC CHAPTER 33

NOTES:

1) NOTICE TO THE APPLICANT/OWNER/OWNER'S AGENT/ARCHITECT OR ENGINEER OF RECORD: BY USING THIS PERMITTED CONSTRUCTION DRAWINGS FOR CONSTRUCTION.INSTALLATION OF THE WORK SPECIFIED HEREIN, YOU AGREE TO COMPLY WITH THE REQUIREMENTS OF THE AUTHORITY HAVING JURISDICTION FOR SPECIAL INSPECTIONS, STRUCTURAL OBSERVATIONS, CONSTRUCTION MATERIAL TESTING AND OFF-SITE FABRICATION OF BUILDING COMPONENTS, CONTAINED IN THE STATEMENT OF SPECIAL INSPECTIONS AND AS, REQUIRED BY THE CALIFORNIA CONSTRUCTION CODES.

2) LOCATIONS AND CLASSIFICATIONS OF EXTINGUISHERS SHALL BE IN ACCORDANCE WITH CFC 906 AND CALIFORNIA CODE OF REGULATIONS (CCR), TITLE 19.

3) DURING CONSTRUCTION, AT LEAST ONE EXTINGUISHER SHALL BE PROVIDED ON EACH FLOOR LEVEL AT EACH STAIRWAY, IN ALL STORAGE AND CONSTRUCTION SHEDS, IN LOCATIONS WHERE FLAMMABLE OR COMBUSTIBLE LIQUIDS ARE STORED OR USED, AND WHERE OTHER SPECIAL HAZARDS ARE PRESENT PER CFC SECTION 3315.1.

4) BUILDINGS UNDERGOING CONSTRUCTION, ALTERATION, OR DEMOLITION SHALL CONFORM TO CFC CHAPTER 33. WELDING, CUTTING, AND OTHER HOT WORK SHALL BE IN CONFORMANCE WITH CFC CHAPTER 35.

5) ADDRESS IDENTIFICATION SHALL BE PROVIDED FOR ALL NEW AND EXISTING BUILDINGS IN A LOCATION THAT IS PLAINLY VISIBLE AND LEGIBLE FROM THE STREET OR ROAD FRONTING THE PROPERTY. WHERE ACCESS IS BY WAY OF A PRIVATE ROAD AND THE BUILDING ADDRESS CANNOT BE VIEWED FROM THE PUBLIC WAY, AN APPROVED SIGN OR MEANS SHALL BE USED TO IDENTIFY THE STRUCTURE. PREMISES IDENTIFICATION SHALL CONFORM TO CBC SECTION 501.2.

6) DUMPSTERS AND TRASH CONTAINERS EXCEEDING 1.5 CUBIC YARDS SHALL NOT BE STORED IN BUILDINGS OR PLACED WITHIN 5 FEET OF COMBUSTIBLE WALLS, OPENINGS OR COMBUSTIBLE ROOF EAVE LINES UNLESS PROTECTED BY AND APPROVED SPRINKLER SYSTEM OR LOCATED IN A TYPE I OR TYPE IIA STRUCTURE SEPARATED BY 10 FEET FROM OTHER STRUCTURES. CONTAINERS LARGER THAN 1 CUBIC YARD SHALL BE OF NON-LIMITED COMBUSTIBLE MATERIALS OR SIMILARLY PROTECTED OR SEPARATED. CFC 304.3.

7) EXITS, EXIT SIGNS, FIRE ALARM PANELS, HOSE CABINETS, FIRE EXTINGUISHER LOCATIONS, AND STANDPIPE CONNECTIONS SHALL NOT BE CONCEALED BY CURTAINS, MIRRORS, OR OTHER DECORATIVE MATERIAL.

8) THE EGRESS PATH SHALL REMAIN FREE AND CLEAR OF ALL OBSTRUCTIONS AT ALL TIMES. NO STORAGE IS PERMITTED IN ANY EGRESS PATHS.

PROJECT DIRECTORY

SYSTEM HOST:
MALAGA COUNTY WATER DISTRICT
3580 S. Frank Street
FRESNO, CA 93725
559.485.7319

DEVELOPER
SITELOGIQ
1512 SILICA AVENUE
SACRAMENTO, CA 95815
916-988-8808
CALVIN OLSEN

ELECTRICAL ENGINEER:
BLYMER
1101 MARIANA VILLAGE PKWY
SUITE 100
ALAMEDA, CA 94501
JOON SUK CHOI
510.521.3773

GENERAL CONTRACTOR
BEI CONSTRUCTION INC.
1101 MARIANA VILLAGE PKWY
SUITE 100
ALAMEDA, CA 94501
TYLER FROATS
(510) 521-3792

ARCHITECT & DESIGN PROFESSIONAL IN CHARGE:
MMPV DESIGN, INC.
718 W ARBOR DR
SAN DIEGO, CA 92103
619.632.2883
AOR: MARIANA MONCADA

STRUCTURAL ENGINEER:
TKJ STRUCTURAL ENGINEERING
9820 WILLOW CREEK RD #490
SAN DIEGO, CA 92131
858.649.1700
YESENIA GRAMAJO

GEOTECHNICAL ENGINEER:
GEO-ENGINEERING SOLUTIONS, INC.
2570 SAN RAMON VALLEY BLVD
SUITE #A102
SAN RAMON, CA 94583
925.433.0450
COLIN FROST

SCOPE OF WORK

WORK CONSISTS OF INSTALLING (1) PHOTOVOLTAIC (PV) SOLAR POWER ARRAY OVER AN EXISTING GRASS AREA & EXISTING ASPHALT PAVED PARKING LOT. SOLAR POWER SYSTEM CONSISTS OF EQUIPMENT, PV MONITORING AND METERING COMMUNICATIONS AND POWER INTERCONNECT TO THE UTILITY GRID.

TOTAL MODULE COUNT: 102
KILOWATTS DC: 44.4 kW
TOTAL ARRAYS: 1

DEFERRED SUBMITTALS: NONE

NEW PHOTOVOLTAIC ARRAY CODE ANALYSIS

SYSTEM DESCRIPTION: Module Type CS6W-540MB-AG (2132MM X 1048MM X 30MM) 28.4 kg

Array Name	Array			Total Modules	kW DC	No. of Cols	Minimum Clear Height	Azimuth	SOUTH Tilt	Occupancy	Const. Type	Area	Allowable Area
A1	7	x	26	182	79.17	3	14'-0"	180 °	7 °	UTILITY	II-B	5,096 SF	-
											TOTAL AREA ARRAY 'A':	5,096 SF	-
			TOTALS:	182	79.2	3					TOTAL PROJECT AREA:	5,096 SF	14500

SHEET NOTES

1. SEE SHEET A1.0 FOR ARRAY DIMENSIONS
2. NOT USED
3. SEE ELECTRICAL SITE PLAN FOR POC INFORMATION AND LOCATION
4. ARROWS ON PLAN POINT TO LOW SIDE OF CANOPY

SITE INFORMATION

PROJECT ADDRESS: 3582 S WINERY RD, FRESNO, CA 93725
APN:331-020-41T
JURISDICTION: FRESNO COUNTY

DRAWING INDEX

SYSTEM HOST
MALAGA COUNTY WATER DISTRICT — SERVING HOME AND INDUSTRY
3580 S. FRANK ST
FRESNO, CA 93725
559-485-7353

SYSTEM DEVELOPER
sitelogiQ
1512 SILICA AVE
SACRAMENTO, CA 95815
916-988-8808

ELECTRICAL CONSTRUCTORS AND ENGINEERS
BLYMYER ENGINEERS
1101 MARINA VILLAGE PKWY
ALAMEDA, CA 94501
510-521-3773

STRUCTURAL ENGINEERING AND STEEL CONSTRUCT
TEICHERT SOLAR
10620 TREENA STREET, STE 140
SAN DIEGO, CA 92131
562-283-2970

ARCHITECT OF RECORD
M M P V d e s i g n
Mariana Moncada, Architect
718 West Arbor Drive
San Diego, CA 92103
619.632.2883

ARCHITECT / ENGINEER OF RECORD

PROJECT
MALAGA COMMUNITY PARK & RECREATION CENTER

3582 S WINERY AVE
FRESNO, CA 93725

NO.	REVISION	DATE

DATE: 07.14.23

SHEET TITLE
TITLE SHEET

SHEET NO.:
MC-A0.0

NEW PHOTOVOLTAIC ARRAY CODE ANALYSIS

SYSTEM DESCRIPTION: Module Type CS6W-540MB-AG (2132MM X 1048MM X 30MM) 28.4 kg

Array Name	Array			Total Modules	kW DC	No. of Cols	Minimum Clear Height	Azimuth	SOUTH Tilt	Occupancy	Const. Type	Area	Allowable Area
A1	7	x	26	182	79.17	3	14'-0"	180 °	7 °	UTILITY	II-B	5,096 SF	-
											TOTAL AREA ARRAY 'A':	5,096 SF	-
			TOTALS:	182	79.2	3					TOTAL PROJECT AREA:	5,096 SF	14500

SHEET NOTES

1. SEE SHEET A1.0 FOR ARRAY DIMENSIONS
2. NOT USED
3. SEE ELECTRICAL SITE PLAN FOR POC INFORMATION AND LOCATION
4. ARROWS ON PLAN POINT TO LOW SIDE OF CANOPY

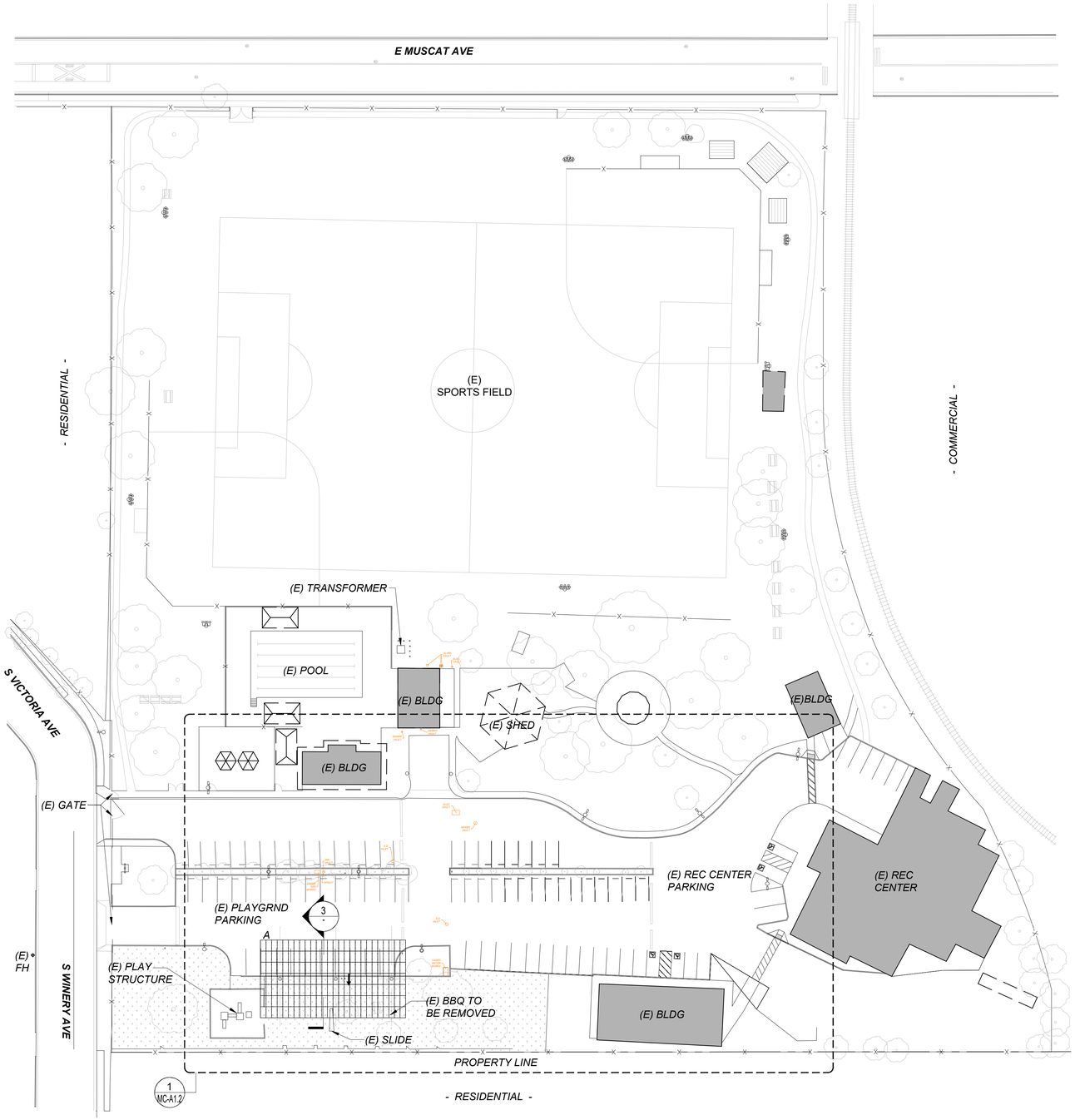

1 SITE PLAN
Scale: 1" = 40' (FOR 24X36 SHEETS)

20 40 80

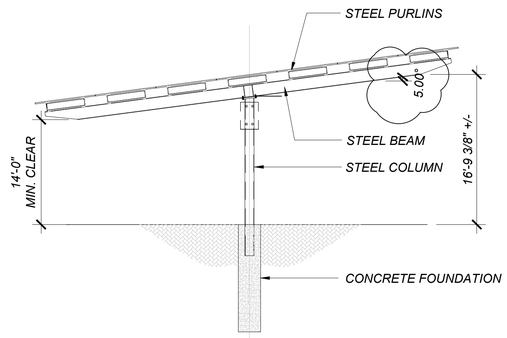

3 SECTON @ ARRAY
Scale: 1/8" = 1'-0" (FOR 24X36 SHEETS)

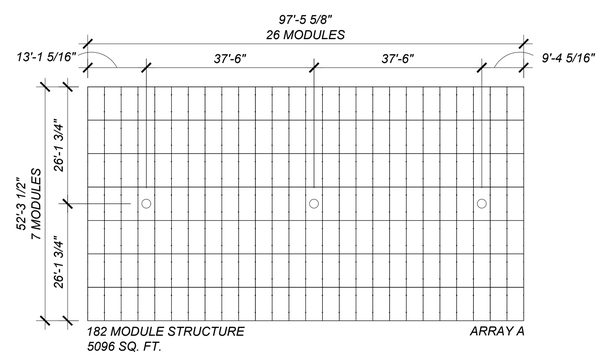

2 ARRAY DIMENSIONS
Scale: 1/16" = 1'-0" (FOR 24X36 SHEETS)

SYSTEM HOST

MALAGA COUNTY WATER DISTRICT
SERVING HOME AND INDUSTRY

3580 S. FRANK ST
FRESNO, CA 93725
559-485-7353

SYSTEM DEVELOPER

sitelogiQ

1512 SILICA AVE
SACRAMENTO, CA 95815
916-988-8808

ELECTRICAL CONSTRUCTORS AND ENGINEERS

BLYMYER ENGINEERS

1101 MARINA VILLAGE PKWY
ALAMEDA, CA 94501
510-521-3773

STRUCTURAL ENGINEERING AND STEEL CONSTRUCT

TEICHERT SOLAR

10620 TREENA STREET, STE 140
SAN DIEGO, CA 92131
562-283-2970

ARCHITECT OF RECORD

M M P V d e s i g n

Mariana Moncada, Architect
718 West Arbor Drive
San Diego, CA 92103
619.632.2883

ARCHITECT / ENGINEER OF RECORD

PROJECT

MALAGA COMMUNITY PARK & RECREATION CENTER

3582 S WINERY AVE
FRESNO, CA 93725

NO.	REVISION	DATE

DATE:
07.14.23

SHEET TITLE

SITE PLAN & FIRE ACCESS PLAN

SHEET NO.:

MC-A1.0

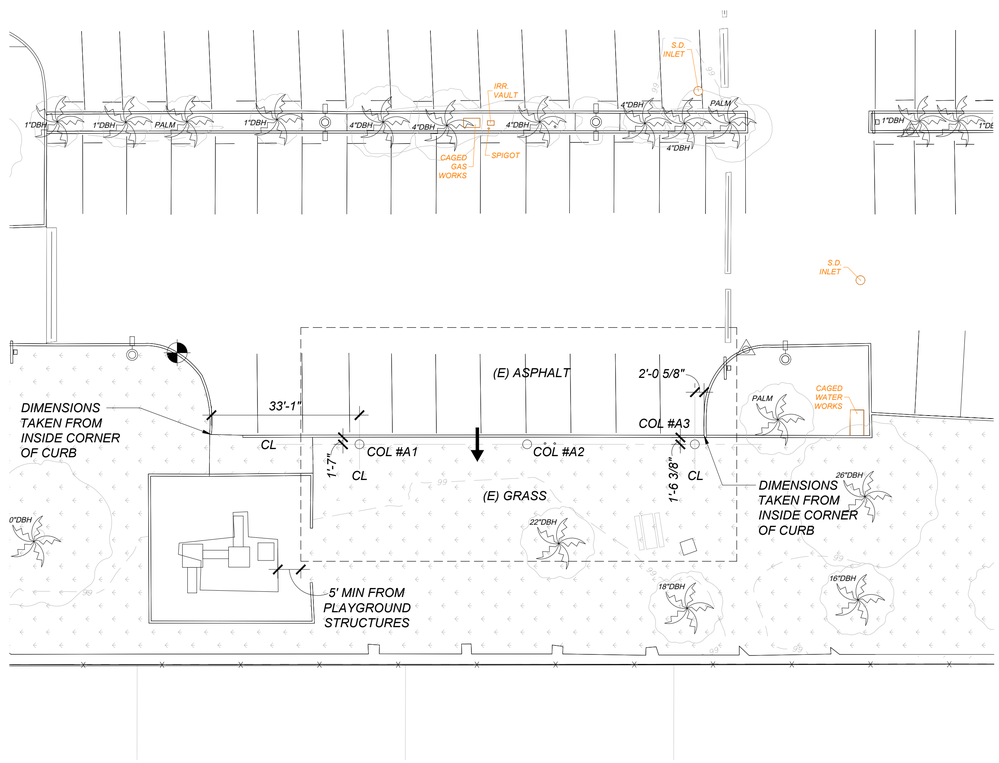

N

1 COLUMN PLAN
Scale: 1/16" = 1' (FOR 24X36 SHEETS)

SYSTEM HOST

MALAGA COUNTY WATER DISTRICT
SERVING HOME AND INDUSTRY

3580 S. FRANK ST
FRESNO, CA 93725
559-485-7353

SYSTEM DEVELOPER

sitelogiQ

1512 SILICA AVE
SACRAMENTO, CA 95815
916-988-8808

ELECTRICAL CONSTRUCTORS AND ENGINEERS

BLYMYER ENGINEERS

1101 MARINA VILLAGE PKWY
ALAMEDA, CA 94501
510-521-3773

STRUCTURAL ENGINEERING AND STEEL CONSTRUCT

TEICHERT SOLAR

10620 TREENA STREET, STE 140
SAN DIEGO, CA 92131
562-283-2970

ARCHITECT OF RECORD

M M P V d e s i g n

Mariana Moncada, Architect
718 West Arbor Drive
San Diego, CA 92103
619.632.2883

ARCHITECT / ENGINEER OF RECORD

PROJECT

MALAGA COMMUNITY PARK & RECREATION CENTER

3582 S WINERY AVE
FRESNO, CA 93725

NO.	REVISION	DATE

DATE:
07.14.23

SHEET TITLE

COLUMN PLAN

SHEET NO.:

MC-A1.1

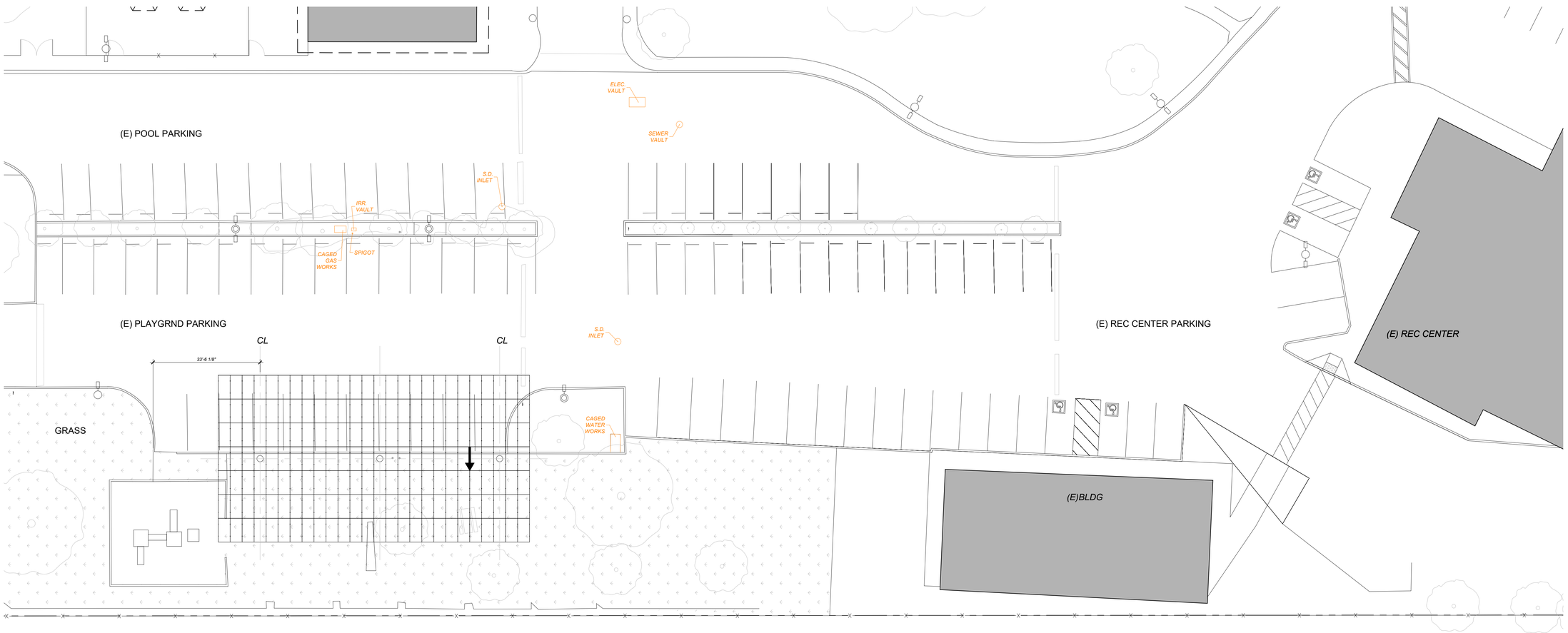

1 PARKING PLAN
Scale: 1/16" = 1' (FOR 24X36 SHEETS)

10 20 40

SYSTEM HOST

3580 S. FRANK ST
FRESNO, CA 93725
559-485-7353

SYSTEM DEVELOPER

1512 SILICA AVE
SACRAMENTO, CA 95815
916-988-8808

ELECTRICAL CONSTRUCTORS AND ENGINEERS

1101 MARINA VILLAGE PKWY
ALAMEDA, CA 94501
510-521-3773

STRUCTURAL ENGINEERING AND STEEL CONSTRUCT

10620 TREENA STREET, STE 140
SAN DIEGO, CA 92131
562-283-2970

ARCHITECT OF RECORD

M M P V d e s i g n

Mariana Moncada, Architect
718 West Arbor Drive
San Diego, CA 92103
619.632.2883

ARCHITECT / ENGINEER OF RECORD

PROJECT

MALAGA COMMUNITY PARK & RECREATION CENTER

3582 S WINERY AVE
FRESNO, CA 93725

NO.	REVISION	DATE

DATE:
07.14.23

SHEET TITLE

ENLARGED PARKING PLAN

SHEET NO.:

MC-A1.2

GENERAL STRUCTURAL NOTES

DESIGN CRITERIA

BUILDING CODE: 2022 CALIFORNIA BUILDING CODE, REFERRED TO AS "THE CODE"
GOVERNING JURISDICTION: CITY OF FRESNO, CA
OCCUPANCY TYPE: S-2

ROOF LIVE LOADS:
DISTRIBUTED = 12 PSF *
POINT LOAD = 300 LBS **

* NON-CONCURRENT W/ PV PANEL DEAD LOAD & WIND LOAD
** CONCURRENT W/ PV PANEL DEAD

SNOW LOADS:
MAXIMUM GROUND SNOW LOAD = 0 PSF

WIND ANALYSIS: DIRECTIONAL PROCEDURE PER ASCE 7, CHAPTER 27
BASIC WIND SPEED, V = 93 MPH
WIND EXPOSURE = CATEGORY C
RISK CATEGORY = II
GUST EFFECT FACTOR, G = 0.85
INTERNAL PRESSURE COEFFICIENT, GCpi = ±0

SEISMIC CRITERIA:
SITE CLASSIFICATION = D
RISK CATEGORY = II
SEISMIC DESIGN CATEGORY = D
SEISMIC ANALYSIS: ASCE 7-16, CHAPTER 15
SEISMIC FORCE-RESISTING SYSTEM = INVERTED PENDULUM
RESPONSE MODIFICATION COEFFICIENT, R = 2.0
SYSTEM OVERSTRENGTH FACTOR, Ω0 = 2.0
DEFLECTION AMPLIFICATION FACTOR, Cd = 2.0
SEISMIC IMPORTANCE FACTOR, IE = 1.0
REDUNDANCY FACTOR, ρ = 1.0 longitudinal
REDUNDANCY FACTOR, ρ = 1.3 transverse
Ss= 0.602g, Sds = 0.529g
S1 = 0.231g
SEISMIC BASE SHEAR.....Cs = 0.2645W

GENERAL

1. THE CONTRACTOR SHALL VERIFY ALL DIMENSIONS PRIOR TO STARTING CONSTRUCTION. DO NOT SCALE THE DRAWINGS. THE ENGINEER SHALL BE NOTIFIED OF ANY DISCREPANCIES OR INCONSISTENCIES. SUBMIT CLARIFICATION REQUEST PRIOR TO PROCEEDING WITH WORK.
2. ALL DRAWINGS ARE CONSIDERED TO BE A PART OF THE CONTRACT DOCUMENTS. THE CONTRACTOR SHALL BE RESPONSIBLE FOR THE REVIEW AND COORDINATION OF ALL DRAWINGS PRIOR TO THE START OF CONSTRUCTION. ANY DISCREPANCIES THAT OCCUR SHALL BE BROUGHT TO THE ATTENTION OF THE ENGINEER PRIOR TO START OF CONSTRUCTION SO THAT A CLARIFICATION CAN BE ISSUED. ANY DEVIATION FROM THE APPROVED SET OF CONTRACT DOCUMENTS SHALL ONLY BE MADE AFTER WRITTEN APPROVAL BY THE ENGINEER OF RECORD. ANY WORK PERFORMED IN CONFLICT WITH THE CONTRACT DOCUMENTS OR ANY CODE REQUIREMENTS SHALL BE CORRECTED BY THE CONTRACTOR AT THEIR OWN EXPENSE.
3. NOTES AND DETAILS ON DRAWINGS SHALL TAKE PRECEDENCE OVER GENERAL NOTES AND TYPICAL DETAILS. WHERE NO DETAILS ARE GIVEN, CONSTRUCTION SHALL BE AS SHOWN FOR SIMILAR WORK. UNLESS NOTED OTHERWISE, DETAILS IN STRUCTURAL DRAWINGS ARE TYPICAL AS INDICATED BY CUTS, REFERENCES OR TITLES.
4. ALL WORK SHALL CONFORM TO THE MINIMUM STANDARDS OF THE FOLLOWING LOCAL BUILDING CODE, AND ANY OTHER REGULATING AGENCIES WHICH HAVE AUTHORITY OVER ANY PORTION OF THE WORK AND THOSE CODES AND STANDARDS LISTED IN THESE NOTES AND SPECIFICATIONS.
5. THE CONTRACT STRUCTURAL DRAWINGS AND SPECIFICATIONS REPRESENT THE FINISHED STRUCTURE. THEY DO NOT INDICATE THE METHOD OF CONSTRUCTION. THE CONTRACTOR SHALL PROVIDE ALL MEASURES NECESSARY TO PROTECT THE STRUCTURE DURING CONSTRUCTION. SUCH MEASURES SHALL INCLUDE, BUT NOT BE LIMITED TO, BRACING, SHORING FOR LOADS DUE TO CONSTRUCTION EQUIPMENT, ETC. OBSERVATION VISITS TO THE SITE BY THE STRUCTURAL ENGINEER SHALL NOT INCLUDE INSPECTION OF THE ABOVE ITEMS.
6. ALL REFERENCED STANDARDS (i.e. ACI, AISC, ASTM, ETC.) SHOWN IN THESE DOCUMENTS SHALL BE PER THE LATEST ADOPTED EDITION AS LISTED IN CHAPTER 35 OF THE CODE.
7. CONTRACTOR TO PROVIDE A LIST OF ALL PROPOSED SUBSTITUTIONS, WITH APPLICABLE MANUFACTURER'S ICC/IAPMO REPORTS, TO ARCHITECT, ENGINEER OF RECORD AND GOVERNING JURISDICTION FOR REVIEW AND APPROVAL BEFORE FABRICATION.

POST-INSTALLED CONCRETE ANCHORS

1. POST-INSTALLED ANCHORAGE SHALL BE AS DETAILED ON THE PLANS. SUBSTITUTION OF PRODUCTS SPECIFICALLY DETAILED IN THESE DRAWINGS SHALL NOT BE ALLOWED WITHOUT WRITTEN APPROVAL FROM THE STRUCTURAL ENGINEER OF RECORD.
2. SPECIAL INSPECTION IS REQUIRED FOR ALL POST-INSTALLED ANCHORS, U.N.O.
3. WHERE ANCHOR TYPE IS NOT NOTED OR AN ALTERNATE BRAND IS PREFERRED, THE FOLLOWING PRODUCTS ARE ACCEPTABLE TO BE SUBMITTED FOR A SUBSTITUTION REQUEST:

   EXPANSION ANCHORS
   a. HILTI KWIK BOLT TZ (ICC ESR-1917)
   b. SIMPSON STRONG-BOLT-2 (ICC ESR-3037)
   c. POWERS POWER-STUD +SD2 (ICC ESR-2502)
   d. ALTERNATE APPROVED BY THE SEOR
4. ALL CONCRETE ANCHORS WHICH ARE EXPOSED TO THE WEATHER SHALL BE STAINLESS STEEL OR HOT DIP GALVANIZED.

FOUNDATIONS

1. FOUNDATION DESIGN BASED ON THE FOLLOWING GEOTECHNICAL REPORT:
   COMPANY: GEO-ENGINEERING SOLUTIONS, INC.
   DATE: FEBRUARY 1, 2023
   REPORT NUMBER: 72-1467-B
2. DRILLED PIERS ARE DESIGNED BASED ON THE FOLLOWING INFORMATION:
   ALLOWABLE LATERAL BEARING PRESSURE = 350 PCF
   ALLOWABLE SKIN FRICTION = 400 PSF*

   *⅓ ALLOWABLE INCREASE FOR TRANSIENT WIND LOADS
3. DE-WATERING OF EXCAVATIONS FROM EITHER SURFACE WATER, GROUND WATER, OR SEEPAGE SHOULD BE PERFORMED, IF REQUIRED.
4. FOUNDATIONS SHALL BE PLACED AND ESTIMATED ACCORDING TO DEPTHS SHOWN ON DRAWINGS. SHOULD SOIL ENCOUNTERED AT THESE DEPTHS NOT BE APPROVED BY THE INSPECTOR OR SOILS ENGINEER, FOUNDATION ELEVATIONS WILL BE ALTERED.
5. FOOTING BACKFILL AND UTILITY TRENCH BACKFILL SHALL BE MECHANICALLY COMPACTED IN LAYERS IN ACCORDANCE WITH THE SOILS REPORT OR BACKFILLED WITH 2-SACK SAND CEMENT SLURRY AND APPROVED BY THE SPECIAL INSPECTOR. SOILS REPORT SHALL TAKE PRECEDENT WHEN RECOMMENDATION GIVEN.
6. CONTRACTOR SHALL INVESTIGATE SITE DURING CLEARING AND EARTHWORK OPERATIONS FOR FILLED EXCAVATIONS OR BURIED STRUCTURES, SUCH AS CESSPOOLS, CISTERNS, FOUNDATIONS, ETC. IF ANY SUCH STRUCTURES ARE FOUND, STRUCTURAL ENGINEER SHALL BE NOTIFIED IMMEDIATELY.
7. SOIL REMOVAL AND RECOMPACTION SHALL BE PER THE SOILS REPORT AND APPROVED CONTRACT DOCUMENTS.
8. THE DRILLED PIERS MUST BE INSPECTED BY THE SOILS ENGINEER PRIOR TO PLACING CONCRETE AND REINFORCING STEEL. ADJUST SHAFT LENGTHS UNDER DIRECTION OF THE SOILS ENGINEER AND THE OWNER'S REPRESENTATIVE BASED ON SOIL CONDITIONS AT TIME OF DRILLING.
9. PRECAUTIONS SHOULD BE TAKEN DURING THE INSTALLATION OF PIERS TO MINIMIZE THE POSSIBILITY OF CAVING. PIERS SPACED CLOSER 3 PIER DIAMETERS SHOULD BE DRILLED AND FILLED ALTERNATELY, ALLOWING THE CONCRETE TO SET AT LEAST EIGHT HOURS BEFORE DRILLING AN ADJACENT HOLE.
10. PIER EXCAVATIONS SHOULD BE FILLED WITH CONCRETE WITHIN 72 HOURS OR AS NOTED IN THE SOILS REPORT AFTER DRILLING AND INSPECTION, WHICHEVER IS SOONER.
11. KEEP EXCAVATIONS FREE OF WATER BEFORE PLACING CONCRETE UNLESS OTHERWISE APPROVED BY THE SOILS ENGINEER. IF UNABLE TO SEAL OFF WATER FLOW, PER THE APPROVAL OF THE SOILS ENGINEER, ALLOW WATER LEVEL TO ATTAIN ITS NORMAL LEVEL AND PLACE CONCRETE BY THE TREMIE METHOD OR OTHER APPROVED METHOD.
12. PLACE REINFORCING STEEL IN ONE CONTINUOUS UNIT AND ACCURATELY HOLD SECURELY IN FINAL POSITION USING CHAIRS OR SPACERS DURING CONCRETE PLACEMENT.
13. AN UNREINFORCED HEIGHT OF 18 INCHES AT THE BOTTOM OF THE SHAFT IS ACCEPTABLE.
14. CONSTRUCTION SHALL COMPLY WITH THE REQUIREMENTS OF ACI 336.3R, LATEST EDITION.

CONCRETE

1. ALL CONCRETE CONSTRUCTION SHALL CONFORM WITH THE CODE AND WITH THE PROVISIONS OF ACI 318 AND ACI 301.
2. CONCRETE MIXES SHALL BE DESIGNED BY A QUALIFIED TESTING LABORATORY AND APPROVED BY THE STRUCTURAL ENGINEER.
   a. MIX DESIGN METHODS (TEST HISTORY OR TRIAL BATCH METHOD) PER THE CODE SHALL BE USED TO PROPORTION CONCRETE. SUBMIT MIX DESIGN METHOD DATA
   b. MIX DESIGNS SHALL SATISFY EITHER THE SHRINKAGE CRITERIA OR THE W/C RATIO AND TOTAL WATER CRITERIA.
3. SCHEDULE OF STRUCTURAL CONCRETE PERFORMANCE REQUIREMENTS:

MINIMUM CONCRETE PROPERTIES			
ELEMENT	f'c @ 28 DAYS [PSI]	MAX W/C	MAX DENSITY [PCF]
24" DIAM. PIER FOUNDATIONS	5,000	0.50	150
EQUIPMENT PADS & MISC.	3,000	0.50	150

4. PORTLAND CEMENT SHALL CONFORM TO ASTM C-150 TYPE II
5. AGGREGATE FOR HARDROCK CONCRETE SHALL CONFORM TO ALL REQUIREMENTS AND TESTS OFASTM C33 AND PROJECT SPECIFICATIONS. EXCEPTIONS MAY BE USED ONLY WITH PERMISSION OF THE STRUCTURAL ENGINEER.
6. CONCRETE MIXING OPERATION, ETC. SHALL CONFORM TO ASTM C94.
7. PLACEMENT OF CONCRETE SHALL CONFORM TO ACI 301 AND PROJECT SPECIFICATIONS. CLEAN AND ROUGHEN TO MIN. ¼" AMPLITUDE ALL CONCRETE SURFACES AGAINST WHICH NEW CONCRETE IS TO BE PLACED.
8. ALL REINFORCING BARS, ANCHOR BOLTS, AND OTHER CONCRETE INSERTS SHALL BE WELL SECURED IN POSITION PRIOR TO PLACING CONCRETE.
9. PIPES OR CONDUITS LARGER THAN 4" DIAMETER SHALL NOT BE EMBEDDED IN STRUCTURAL CONCRETE EXCEPT WHERE SPECIFICALLY PERMITTED OR APPROVED BY STRUCTURAL ENGINEER. PIPES OR CONDUITS SHALL NOT DISPLACE OR INTERRUPT REINFORCING BARS. SPACE THE PIPES OR CONDUITS SUCH THAT PROPER CONCRETE PLACEMENT AND CONSOLIDATION IS ACHIEVED.
10. PROVIDE MIN. ¾" CHAMFER ON ALL EXPOSED CORNERS.
11. THE STEEL STRUCTURES MAY BE INSTALLED 48 HOURS AFTER THE FOUNDATIONS HAVE BEEN CAST OR AFTER CONCRETE REACHES A MINIMUM COMPRESSIVE STRENGTH OF 1,500-PSI,WHICHEVER COMES FIRST. BREAK TESTS NOT REQUIRED IF WAITING UNTIL 48 HOURS TO ERECT STEEL.

REINFORCING STEEL

1. REINFORCING BARS SHALL CONFORM TO THE REQUIREMENTS OF CHAPTER 19 OF THE CODE, ASTM A615 (A706 WHERE NOTED ON PLANS), GRADE 60 U.N.O.
2. BARS SHALL BE CLEAN OF RUST, GREASE, OR OTHER MATERIALS LIKELY TO IMPAIR BOND. ALL REINFORCING BAR BENDS SHALL BE MADE COLD.
3. REINFORCING BAR SPLICES SHALL, IN CONCRETE, CONFORM TO THE PROVISIONS OF ACI 318. LAP ALL HORIZONTAL BARS AT CORNERS AND INTERSECTIONS.
4. BARS IN SLABS SHALL BE SECURELY SUPPORTED ON WELL-CURED CONCRETE BLOCKS OR APPROVED METAL CHAIRS, PRIOR TO PLACING CONCRETE.
5. REINFORCING STEEL SHALL BE DETAILED IN ACCORDANCE WITH ACI 315.
6. COMPLETE AND DETAILED REINFORCING PLACEMENT DRAWINGS SHALL BE PREPARED AND SUBMITTED FOR REVIEW BY THE STRUCTURAL ENGINEER PRIOR TO FABRICATION IN ACCORDANCE WITH SPECIFICATIONS AND APPLICABLE CODES. THE APPROVED DRAWINGS SHALL BE AVAILABLE ON THE JOB SITE PRIOR TO PLACING OF CONCRETE.
7. REBAR SPACINGS GIVEN ARE MAXIMUM ON CENTER WHETHER STATED AS "O.C." OR NOT. UNLESS A SPECIFIED LENGTH IS GIVEN, ALL REBAR IS CONTINUOUS WHETHER STATED AS "CONT." OR NOT.
8. MECHANICAL BAR SPLICES (COUPLERS) SHALL BE USED WHERE SPECIFIED ON PLANS. THEY MAY ALSO BE USED AT THE CONTRACTOR'S OPTION IN LIEU OF LAP SPLICES AND WHERE REINFORCING IS SHOWN CONTINUOUS THROUGH CONSTRUCTION JOINTS. UNLESS NOTED OTHERWISE, ALL MECHANICAL BAR SPLICES SHALL BE "TYPE 2" AS DEFINED BY ACI 318.
9. COUPLERS SHALL BE AND BE LENTON A2 SERIES MECHANICAL SPLICES (IAPMO ER-0129), OR EQUIVALENT, AND INSTALLED PER THE MANUFACTURER'S RECOMMENDATIONS.
9. CONTINUOUS INSPECTION OF CONCRETE SHALL INCLUDE INSPECTION DURING INSTALLATION OF REINFORCING STEEL. INSPECTION SHALL BE SCHEDULED SO THAT PLACEMENT OF REINFORCING STEEL, CONDUIT, SLEEVES, AND EMBEDDED ITEMS, MAY BE CORRECTED PRIOR TO THE SCHEDULED POUR
10. CONCRETE PROTECTION FOR REINFORCEMENT:
    a. CAST-IN-PLACE CONCRETE. THE FOLLOWING MINIMUM CONCRETE COVER SHALL BE PROVIDED FOR REINFORCEMENT:

MINIMUM CONCRETE COVER		
ELEMENT	COVER	TOLERANCE (+/-)
PERMANENTLY CAST AGAINST OR PERMANENTLY EXPOSED TO EARTH	3"	⅜"
EXPOSED TO EARTH OR WEATHER		
a) #6 THROUGH #18 BAR	2"	⅜"
b) #5 BAR OR SMALLER	1½"	⅜"
NOT EXPOSED TO WEATHER OR CAST AGAINST GROUND	¾"	¼"

SUBMITTALS

1. THE STRUCTURAL SHOP DRAWING REVIEW IS INTENDED TO HELP THE ENGINEER VERIFY THE DESIGN CONCEPT. IT IS THE CONTRACTOR'S RESPONSIBILITY TO CHECK THEIR OWN SHOP DRAWINGS.
2. THE STRUCTURAL SHOP DRAWINGS WILL BE RETURNED FOR RESUBMITTAL IF A CURSORY REVIEW SHOWS MAJOR ERRORS WHICH SHOULD HAVE BEEN FOUND BY THE CONTRACTOR'S CHECKING.
3. THE FOLLOWING SHOP DRAWINGS ARE NOT REQUIRED FOR SUBMITTAL FOR STRUCTURAL REVIEW:
   a. SHORING AND BRACING.
   b. UNSPLICED REBAR AT SLAB-ON-GRADE AND SPREAD FOOTINGS.
   c. FORMWORK.
   d. STRUCTURAL STEEL MILL REPORTS.
4. THE FOLLOWING SHOP DRAWINGS (AND CALCULATIONS WHEN APPLICABLE) ARE REQUIRED FOR SUBMITTAL FOR STRUCTURAL REVIEW:
   a. CONCRETE MIX DESIGNS, INCLUDING STRENGTH TEST RESULTS
   b. REINFORCING STEEL (EXCEPT WHERE NOTED BY NOTE 3 ABOVE)
   c. STRUCTURAL STEEL
   d. ANCHOR ROD CUT SHEET WITH DIAMETER, LENGTH, AND MATERIAL STRENGTH
   e. WELDING PROCEDURE SPECIFICATIONS
5. ANY SUBMITTAL OF A DETAIL SHEET WITH ADDED INFORMATION NOT SHOWN ON PLANS SHALL BE ACCOMPANIED BY LOCATION PLAN IDENTIFYING THE MEMBERS INVOLVED AND CLOUDING AROUND ADDED INFORMATION.
6. THE SHOP DRAWINGS SHALL REFERENCE THE DATA OF THE DESIGN USED TO PRODUCE THE SUBMITTAL.
7. CONTRACTOR/SUBCONTRACTOR TO PROVIDE DIGITAL SET OF SHOP DRAWINGS FOR REVIEW BY THE STRUCTURAL ENGINEER. DIGITAL SET WILL BE RETURNED TO THE CONTRACTOR FOR DISTRIBUTION.

COLD FORMED STEEL

1. ALL COLD-FORMED METAL FRAMING CONSTRUCTION SHALL BE IN ACCORDANCE WITH AISI S100 "SPECIFICATIONS FOR DESIGN OF COLD-FORMED STEEL STRUCTURAL MEMBERS".
2. ALL COLD-FORMED STEEL SHALL CONFORM TO THE FOLLOWING (U.N.O):

43 MIL / 18GA AND LIGHTER	ASTM A1003, GR 33 OR ASTM 653, GR 33
54 MIL / 16 GA AND HEAVIER	ASTM A1003, GR 55 OR ASTM 653, GR 55 MIN. Fy = 55 ksi, MIN. Fu = 70 ksi

3. ALL COLD-FORMED STEEL SHALL HAVE A MINIMUM COATING PROTECTION G90.
4. WELDING IS NOT PERMITTED UNLESS SPECIFICALLY APPROVED BY THE SEOR.
5. ALL APPROVED WELDING SHALL BE PERFORMED BY WELDERS CERTIFIED FOR ALL APPROPRIATE DIRECTIONS COMPLYING WITH AWS D1.3. WELDING RODS SHALL CONFORM TO THE FOLLOWING:

43 MIL / 18GA AND LIGHTER	E60XX
54 MIL / 16 GA AND HEVIER	E70XX OR E6013
COLD FORMED TO STRUCTURAL STEEL	E70XX LOW HYDROGEN

6. WIRE TYING OF FRAMING COMPONENTS SHALL NOT BE PERMITTED.
7. TEMPORARY BRACING REQUIREMENTS ARE THE RESPONSIBILITY OF THE CONTRACTOR.
8. ALL SCREWS SHALL BE FULLY DRIVEN AND PROTRUDE THE LARGER OF 3 THREADS OR 1/4" THROUGH THE LAST MATERIAL JOINED. THERE SHALL BE NO SPACE BETWEEN JOINING MEMBERS AT THE SCREW LOCATION.
9. ALL FIELD CUTTING OF MEMBERS SHALL BE BY SAWING OR SHEARING. TORCH OR PLASMA CUTTING OF MEMBERS SHALL NOT BE PERMITTED.
10. ALL FRAMING COMPONENTS SHALL BE CUT SQUARELY FOR ATTACHMENT TO PERPENDICULAR MEMBERS OR AS REQUIRED ON AN ANGULAR FIT AGAINST ABUTTING MEMBERS. MEMBERS SHALL BE HELD POSITIVELY IN PLACE UNTIL PROPERLY FASTENED.
11. SPLICING OF PURLINS OR OTHER LOAD CARRYING MEMBERS SHALL NOT BE PERMITTED UNLESS SPECIFICALLY APPROVED BY THE ENGINEER OF RECORD.
12. WHEN CLIP ANGLES WITH SCREW CONNECTIONS ARE USED TO ATTACH A COMPONENT TO THE PRIMARY STRUCTURE, THE CLIP ANGLE SHALL BE FASTENED TO THE PRIMARY STRUCTURE FIRST; THEN THE COMPONENT SHALL BE BROUGHT TO BEAR ON THE STRUCTURE AND FASTENED TO THE CLIP ANGLE.
13. MEMBERS SHALL BE IDENTIFIED PER SECTION 2203.1 OF 2016 CBC PART 2, VOL. 2.
14. ALL EXTERIOR SCREWS SHALL BE ELCO DRIL-FLEX (ICC ESR-3332) OR ITW BUILDEX TEKS SELECT (ICC ESR-3223) UNLESS APPROVED BY THE SEOR.

STRUCTURAL INSPECTION AND TESTING

THE FOLLOWING ELEMENTS OF CONSTRUCTION SHALL REQUIRE SPECIAL INSPECTION PER CHAPTER 17 OF THE CODE. U.N.O.

SPECIAL INSPECTIONS AND TESTING SHALL BE PROVIDED BY AN INSPECTION AGENCY, EMPLOYED BY THE OWNER, AND QUALIFIED BY THE BUILDING OFFICIAL TO INSPECT THE PARTICULAR TYPE OF CONSTRUCTION. TESTS AND INSPECTIONS, AS REQUIRED BY SECTIONS 110 & 1705 OF THE 2016 CBC W/ CALIFORNIA AMENDMENTS, SHALL BE PERFORMED DURING CONSTRUCTION ON THE TYPES OF WORK LISTED BELOW:

TESTING AND INSPECTION		
	INSPECTIONS	TESTING
STEEL CONSTRUCTION	1706.2	1705.13
CONCRETE CONSTRUCTION	1705.3	1705.3
SOILS	1705.6	
CAST IN-PLACE DEEP FOUNDATIONS	1705.8	

1. THE SPECIAL INSPECTIONS IDENTIFIED ON PLANS ARE, IN ADDITION TO, AND NOT A SUBSTITUTE FOR, THOSE INSPECTIONS REQUIRED TO BE PERFORMED BY THE GOVERNING JURISDICTION. SPECIALLY INSPECTED WORK WHICH IS INSTALLED OR COVERED WITHOUT THE APPROVAL OF AN INSPECTOR FROM THE GOVERNING JURISDICTION IS SUBJECT TO REMOVAL OR EXPOSURE.
2. FOR CONTINUOUS INSPECTION, WHEN WORK IN MORE THAN ONE CATEGORY OF WORK REQUIRING SPECIAL INSPECTION IS TO BE PERFORMED SIMULTANEOUSLY, OR THE GEOGRAPHIC LOCATION OF THE WORK IS SUCH THAT IT CANNOT BE CONTINUOUSLY OBSERVED IN ACCORDANCE WITH THE PROVISIONS OF THE CODE, IT IS THE AGENT'S RESPONSIBILITY TO EMPLOY A SUFFICIENT NUMBER OF INSPECTORS TO ASSURE THAT ALL WORK IS INSPECTED IN ACCORDANCE WITH THOSE PROVISIONS.
3. THE SPECIAL INSPECTORS MUST BE CERTIFIED BY THE GOVERNING JURISDICTION IN THE CATEGORY OF WORK REQUIRED TO HAVE SPECIAL INSPECTION. EXCEPTIONS:
   a. SOILS INSPECTIONS BY THE SOILS ENGINEER OF RECORD OR PROJECT INSPECTOR
   b. WHEN WAIVED BY THE GOVERNING JURISDICTION
5. IT IS THE RESPONSIBILITY OF THE CONTRACTOR TO INFORM THE OWNER'S REPRESENTATIVE, SPECIAL INSPECTOR OR INSPECTION AGENCY AT LEAST TWO WORKING DAYS PRIOR TO PERFORMING ANY WORK THAT REQUIRES SPECIAL INSPECTION. ALL WORK PERFORMED WITHOUT REQUIRED SPECIAL INSPECTION IS SUBJECT TO REMOVAL.
6. PROVIDE SPECIAL INSPECTION FOR CONNECTIONS BOLTED WITH A325 AND A490 BOLTS. INSPECTIONS SHALL BE DONE PER APPROVED NATIONALLY RECOGNIZED STANDARDS AND THE REQUIREMENTS OF THE CODE AND THE GOVERNING JURISDICTION. WHILE THE WORK IS IN PROGRESS, THE SPECIAL INSPECTOR SHALL DETERMINE THE BOLTS, NUTS, WASHERS AND PAINT; BOLTED PARTS; AND INSTALLATION AND TIGHTENING MEET THE STANDARDS REQUIREMENTS.
7. THE SPECIAL INSPECTOR FOR HIGH STRENGTH BOLTED CONNECTIONS SHALL:
   a. OBSERVE THE CALIBRATION PROCEDURES WHEN SUCH PROCEDURES ARE REQUIRED BY THE PLANS OR SPECIFICATIONS.
   b. MONITOR THE INSTALLATION OF BOLTS TO DETERMINE THAT ALL PLIES OF CONNECTED MATERIALS HAVE BEEN DRAWN TOGETHER.
   c. MONITOR THAT THE SELECTED PROCEDURE IS PROPERLY USED TO TIGHTEN ALL BOLTS.
8. IF DEEMED NECESSARY, THE SPECIAL INSPECTOR SHALL PROVIDE PROGRESS REPORTS AND A FINAL REPORT TO THE STRUCTURAL ENGINEER.
9. THE SPECIAL INSPECTOR SHALL ENSURE THAT ALL DEFICIENCIES NOTED BY THE STRUCTURAL ENGINEER IN STRUCTURAL OBSERVATION REPORTS ARE CORRECTED. SUCH COMPLIANCE SHALL BE REFERENCED IN SPECIAL INSPECTOR REPORT.
10. THE CONSTRUCTION MATERIALS TESTING LABORATORY MUST BE APPROVED BY THE GOVERNING JURISDICTION, FOR TESTING OF MATERIALS, SYSTEMS, COMPONENTS AND, EQUIPMENTS.
11. PERIODIC INSPECTION SHALL OCCUR FREQUENTLY ENOUGH TO INSPECT ALL OF THE INSTALLED ITEMS AND TO PERIODICALLY WITNESS THE INSTALLATION OF THE ITEMS.

STRUCTURAL STEEL

1. STRUCTURAL STEEL SHALL BE DETAILED, FABRICATED, AND ERECTED IN ACCORDANCE WITH AISC 360 AND AISC 303.
2. ALL STRUCTURAL STEEL SHALL CONFORM TO THE ASTM DESIGNATION AS INDICATED BELOW (U.N.O.):

MINIMUM MATERIAL PROPERTIES	
ELEMENT	ASTM
BASE PLATES & CAP PLATES	A572, GR 50
ALL OTHER PLATES	A36, GR 36 OR DUAL GRADE
WF MATERIAL	A992, GR 50
HSS MATERIAL	A500, GR C
STRUCTURAL PIPES	A53, GR B
HIGH STRENGTH BOLTS	A325
MACHINE BOLTS	A307
ANCHOR BOLTS	F1554, GR 105

3. THE STRUCTURAL STEEL FABRICATOR SHALL FURNISH SHOP DRAWINGS OF ALL STEEL FOR STRUCTURAL ENGINEER'S REVIEW BEFORE FABRICATION.
4. HOLES IN STEEL SHALL BE 1/16" LARGER DIAMETER THAN NOMINAL SIZE OF BOLT USED, EXCEPT AS NOTED. COLUMN BASE PLATE HOLES MAY BE OVERSIZED PER AISC MANUAL OR AS NOTED.
5. ALL STRUCTURAL STEEL SURFACES THAT ARE ENCASED IN CONCRETE, MASONRY, OR SPRAY ON FIREPROOFING, OR ARE ENCASED BY BUILDING FINISH, SHALL BE LEFT UNPAINTED.
6. ALL STRUCTURAL STEEL AND MISCELLANEOUS METAL EXPOSED TO THE WEATHER SHALL BE HOT DIP GALVANIZED OR PAINTED AFTER FABRICATION, U.N.O.
7. GALVANIZING AT FIELD WELDS AND DAMAGE SHALL BE REPAIRED WITH A GALVANIZING REPAIR PAINT ACCORDING TO ASTM A780.
8. TIGHTEN HIGH STRENGTH BOLTS TO "SNUG-TIGHT" CONDITION PER AISC SPECIFICATION FOR STRUCTURAL JOINTS, U.N.O.
9. PROVIDE BEVELED WASHERS PER ANSI B18.23.1 AS REQUIRED ON SLOPED SURFACES.
21. GROUT OTHER SHALL BE NON-SHRINK, NON-METALLIC GROUT, MEETING ASTM C-1107, MIXED AND INSTALLED PER MANUFACTURER'S SPECIFICATIONS.
22. TIGHTEN ANCHOR BOLTS TO "SNUG TIGHT" CONDITION PER AISC SPECIFICATIONS, U.N.O.
23. WELDING:
24. ALL WELDS SHALL BE IN CONFORMITY WITH THE PROJECT SPECIFICATIONS AND AWS D1.1. SEE SPECIAL INSPECTION SECTION FOR WELDING INSPECTION REQUIREMENTS.
    a. ALL WELDING IS TO BE DONE BY CERTIFIED WELDERS USING E70XX ELECTRODES (U.N.O.).
    b. WELD LENGTHS CALLED FOR ON PLANS ARE THE NET EFFECTIVE LENGTH REQUIRED. WHERE FILLET WELD SYMBOL IS GIVEN WITHOUT INDICATION OF SIZE, USE MINIMUM SIZE WELDS AS SPECIFIED IN AISC 360.
    c. WELDS TERMINATING AT ENDS OR SIDES, WHERE PRACTICAL, SHALL BE RETURNED CONTINUOUSLY AROUND CORNERS A DISTANCE 2 TIMES THE NOMINAL SIZE OF THE WELD PER AISC 360 SECTION J2.2B, U.N.O.
    d. ALL FULL-PENETRATION FIELD WELDS SHALL BE ULTRASONICALLY TESTED.
    e. ALL TWO-SIDED FILLET WELDS SHOWN SHALL BE WELDED WITH THE SAME (GIVEN) WELD SIZE ON BOTH SIDES.
    f. ALL UNSIZED GROOVE OR BUTT WELDS SHOWN SHALL BE COMPLETE PENETRATION.
    g. ALL PROVISIONS OF AWS SHALL BE OBSERVED INCLUDING REQUIREMENTS FOR BACK-UP PLATES AND WELD TRANSITIONS WHETHER OR NOT THEY ARE SPECIFICALLY SHOWN.
    h. A WRITTEN WELDING PROCEDURE SPECIFICATION SHALL BE SUBMITTED TO THE TESTING LABORATORY. IT SHALL INCLUDE ALL WELDING PROCEDURES TO BE USED AS DESCRIBED IN AWS, CHAPTER 4.
    i. WHERE FIELD WELDING IS INDICATED, THE FIELD DESIGNATION IS GIVEN AS A RECOMMENDATION ONLY.

SYSTEM HOST
MALAGA COUNTY WATER DISTRICT
SERVING HOME AND INDUSTRY
3580 S. FRANK ST
FRESNO, CA 93725
559-485-7353

SYSTEM DEVELOPER
sitelogiQ
1512 SILICA AVE
SACRAMENTO, CA 95815
916-988-8808

ELECTRICAL CONSTRUCTORS AND ENGINEERS
BLYMYER ENGINEERS
1101 MARINA VILLAGE PKWY
ALAMEDA, CA 94501
510-521-3773

STRUCTURAL ENGINEERING AND STEEL CONSTRUCT
TEICHERT SOLAR
10620 TREENA STREET, STE 140
SAN DIEGO, CA 92131
562-283-2970

ARCHITECT OF RECORD
M M P V d e s i g n
Mariana Moncada, Architect
718 West Arbor Drive
San Diego, CA 92103
619.632.2883

ARCHITECT / ENGINEER OF RECORD

PROJECT
MALAGA COMMUNITY PARK & RECREATION CENTER

3582 S WINERY AVE
FRESNO, CA 93725

NO.	REVISION	DATE

DATE: 07.14.23

SHEET TITLE
GENERAL STRUCTURAL NOTES

SHEET NO.:
S100

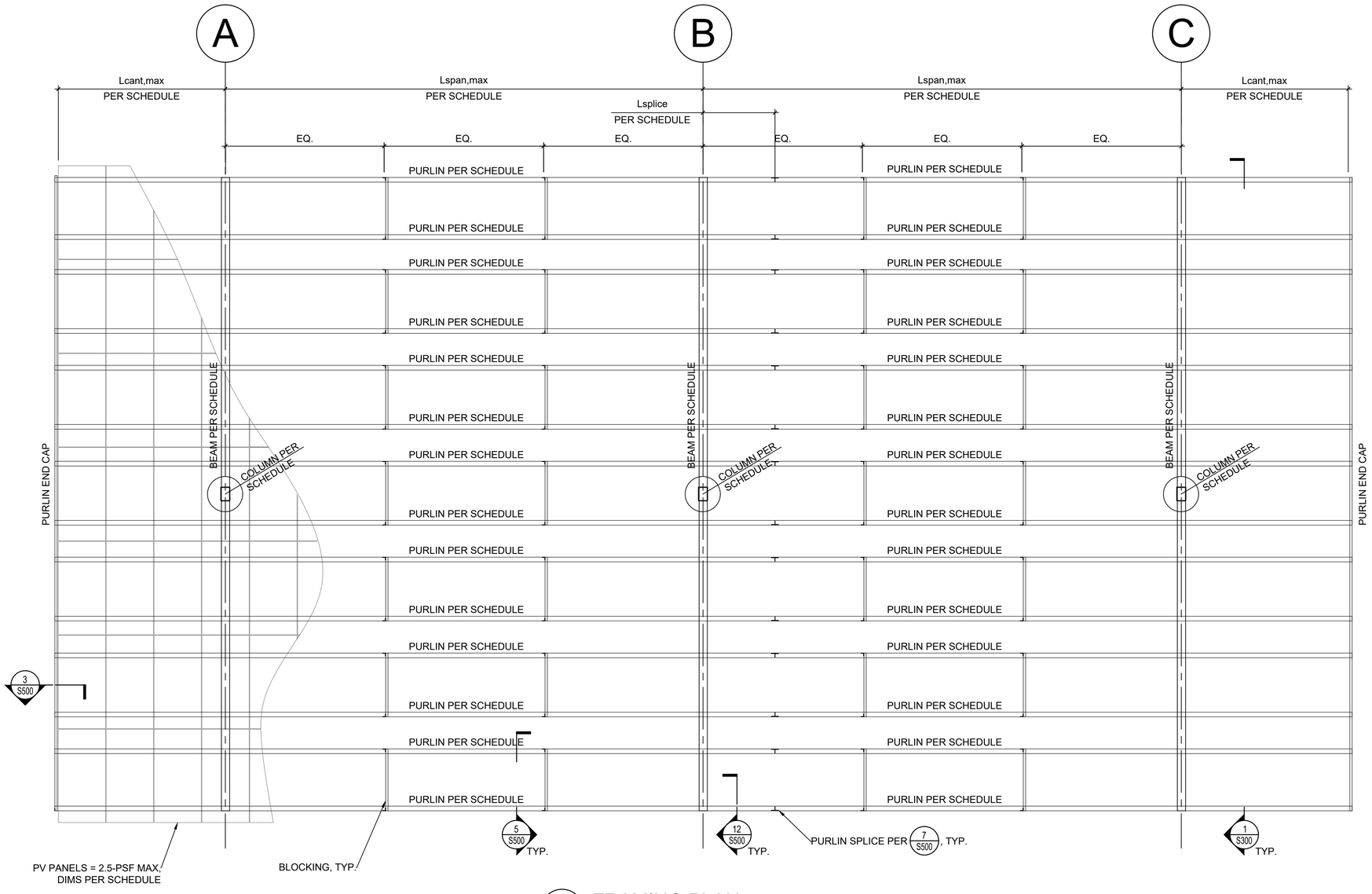

1 FRAMING PLAN

SCALE: ¼" = 1'-0"

MEMBER & DIMENSIONAL SCHEDULE

ARRAY	ARRAY SIZE	# OF COLUMNS	COLUMN	BEAM	PURLIN	PANEL LENGTH	PANEL WIDTH	SPAN LENGTH, Lspan	CANT. LENGTH, Lcant	SPLICE LENGTH, Lsplice	MAX. COLUMN LENGTH	MIN. CLEARANCE
A	7X26	3	HSS12x8x$\frac{5}{16}$	W14x43	12X4X14GA	89.2"	44.6"	37'-6"	13'-1 5/16"	5'-7 5/16"	13'-6"	13'-6"

2 SCHEDULE

NO SCALE

SYSTEM HOST

MALAGA COUNTY WATER DISTRICT
SERVING HOME AND INDUSTRY
3580 S. FRANK ST
FRESNO, CA 93725
559-485-7353

SYSTEM DEVELOPER

sitelogiq
1512 SILICA AVE
SACRAMENTO, CA 95815
916-988-8808

ELECTRICAL CONSTRUCTORS AND ENGINEERS

BLYMYER ENGINEERS
1101 MARINA VILLAGE PKWY
ALAMEDA, CA 94501
510-521-3773

STRUCTURAL ENGINEERING AND STEEL CONSTRUCT

TEICHERT SOLAR
10620 TREENA STREET, STE 140
SAN DIEGO, CA 92131
562-283-2970

ARCHITECT OF RECORD

M M P V d e s i g n
Mariana Moncada, Architect
718 West Arbor Drive
San Diego, CA 92103
619.632.2883

ARCHITECT / ENGINEER OF RECORD

PROJECT

MALAGA COMMUNITY PARK & RECREATION CENTER

3582 S WINERY AVE
FRESNO, CA 93725

NO.	REVISION	DATE

DATE: 07.14.23

SHEET TITLE

FRAMING PLAN & SCHEDULE

SHEET NO.:

S200

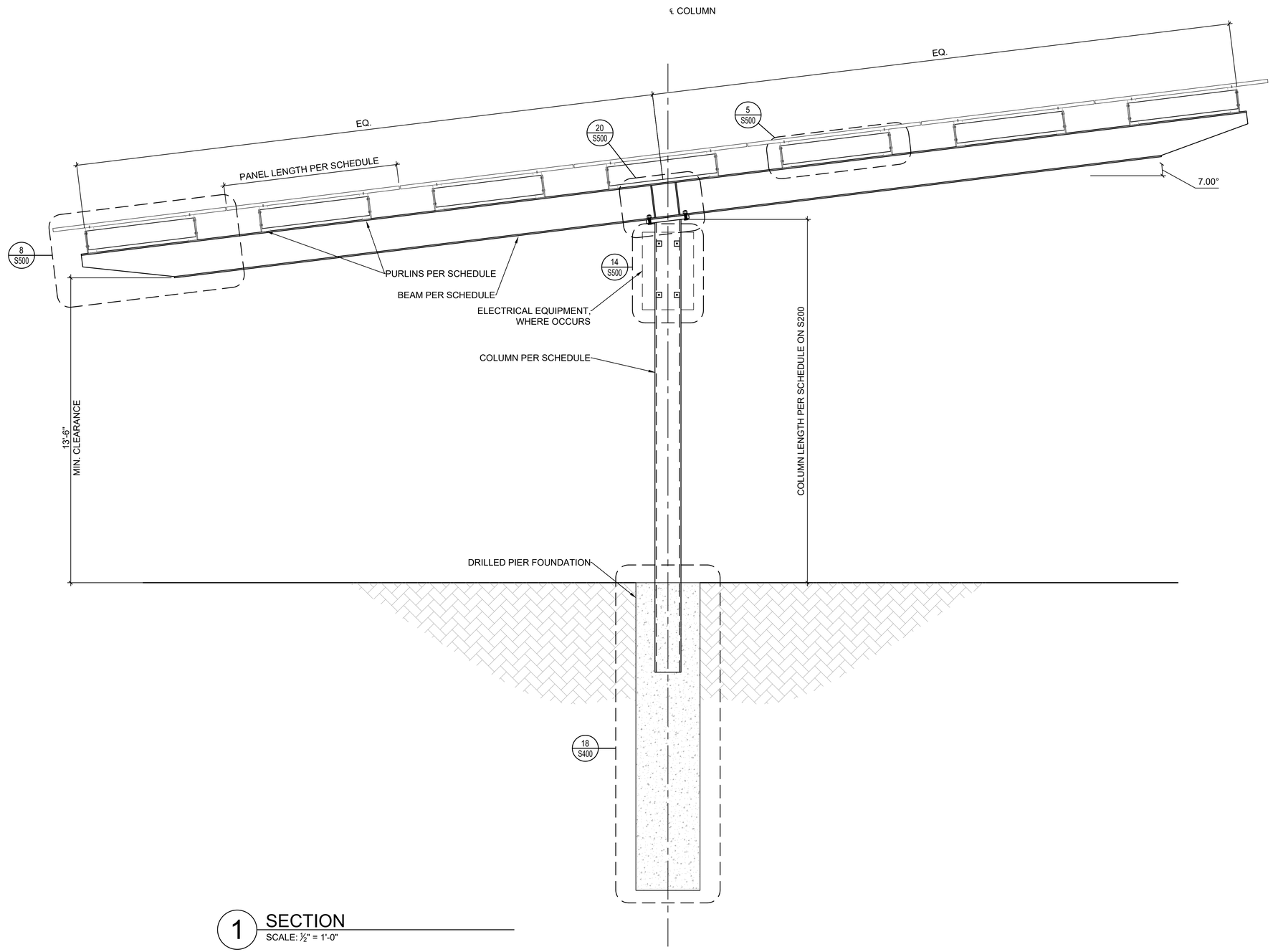

1 SECTION
SCALE: ½" = 1'-0"

SYSTEM HOST

MALAGA COUNTY WATER DISTRICT
SERVING HOME AND INDUSTRY

3580 S. FRANK ST
FRESNO, CA 93725
559-485-7353

SYSTEM DEVELOPER

sitelogiQ

1512 SILICA AVE
SACRAMENTO, CA 95815
916-988-8808

ELECTRICAL CONSTRUCTORS AND ENGINEERS

BLYMYER ENGINEERS

1101 MARINA VILLAGE PKWY
ALAMEDA, CA 94501
510-521-3773

STRUCTURAL ENGINEERING AND STEEL CONSTRUCT

TEICHERT SOLAR

10620 TREENA STREET, STE 140
SAN DIEGO, CA 92131
562-283-2970

ARCHITECT OF RECORD

M M P V d e s i g n

Mariana Moncada, Architect
718 West Arbor Drive
San Diego, CA 92103
619.632.2883

ARCHITECT / ENGINEER OF RECORD

PROJECT

MALAGA COMMUNITY PARK & RECREATION CENTER

3582 S WINERY AVE
FRESNO, CA 93725

NO.	REVISION	DATE

DATE:
07.14.23

SHEET TITLE

SECTION - 7X

SHEET NO.:

S300

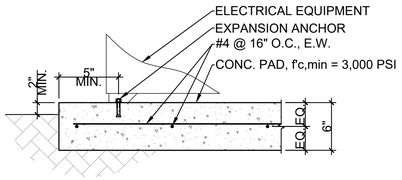

7 SLAB MOUNTED EQUIPMENT
SCALE: 1" = 1'-0"

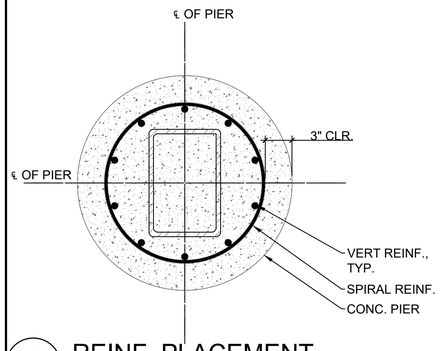

8 REINF. PLACEMENT
SCALE: 3" = 1'-0"

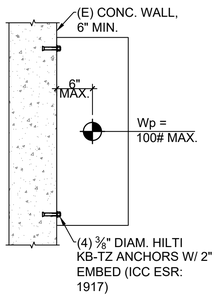

12 WALL MOUNTED EQUIPMENT
SCALE: ½" = 1'-0"

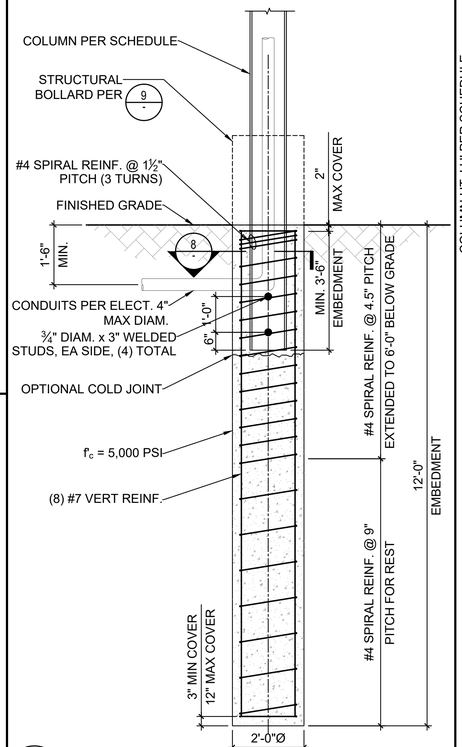

18 PIER FOUNDATION
SCALE: ½" = 1'-0"

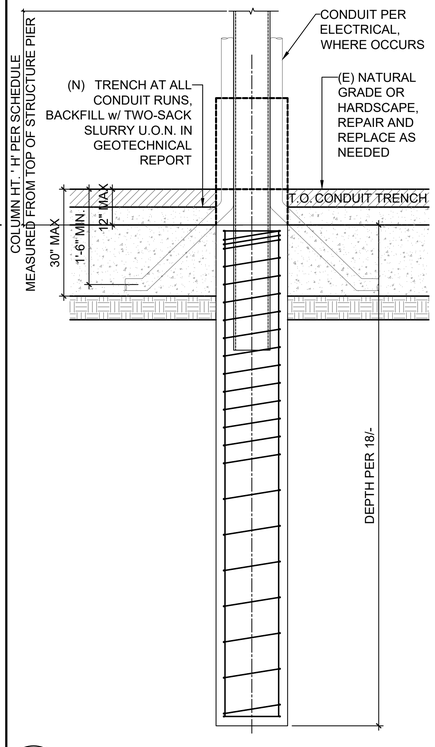

19 CONDUIT ROUTING
SCALE: ½" = 1'-0"

SYSTEM HOST

3580 S. FRANK ST
FRESNO, CA 93725
559-485-7353

SYSTEM DEVELOPER

1512 SILICA AVE
SACRAMENTO, CA 95815
916-988-8808

ELECTRICAL CONSTRUCTORS AND ENGINEERS

1101 MARINA VILLAGE PKWY
ALAMEDA, CA 94501
510-521-3773

STRUCTURAL ENGINEERING AND STEEL CONSTRUCT

10620 TREENA STREET, STE 140
SAN DIEGO, CA 92131
562-283-2970

ARCHITECT OF RECORD

M M P V d e s i g n

Mariana Moncada, Architect
718 West Arbor Drive
San Diego, CA 92103
619.632.2883

ARCHITECT / ENGINEER OF RECORD

PROJECT

MALAGA COMMUNITY PARK & RECREATION CENTER

3582 S WINERY AVE
FRESNO, CA 93725

NO.	REVISION	DATE

DATE: 07.14.23

SHEET TITLE

FOUNDATION & ANCHORAGE DETAILS

SHEET NO.:

S400

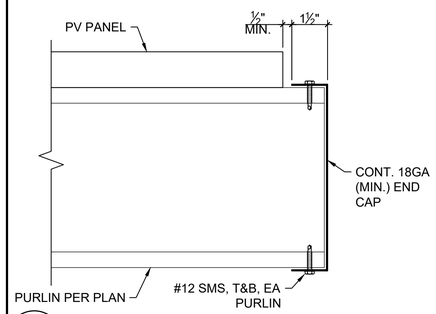

3 END CAP CONN. DETAIL
SCALE: 3" = 1'-0"

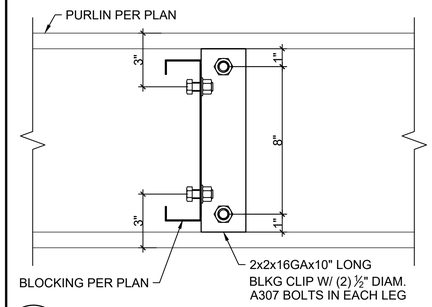

4 BLOCKING TO PURLIN CONN.
SCALE: 3" = 1'-0"

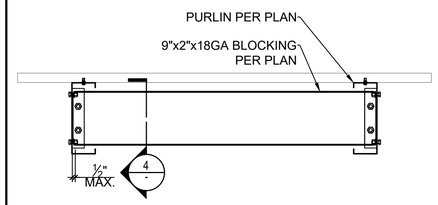

5 PURLIN BLOCKING
SCALE: ½" = 1'-0"

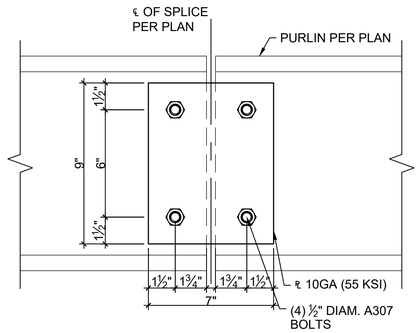

7 PURLIN SPLICE
SCALE: 3" = 1'-0"

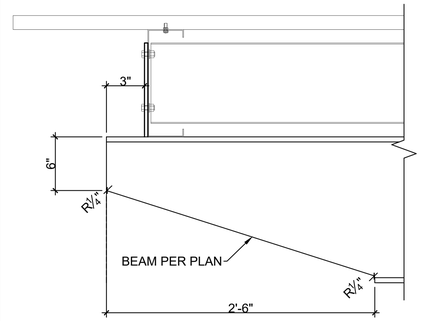

8 BEAM END DETAIL
SCALE: 1½" = 1'-0"

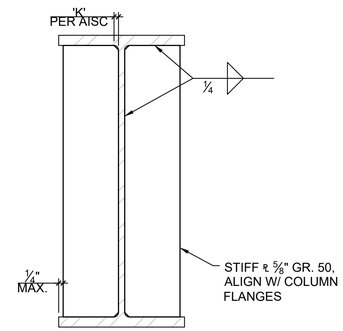

10 STIFFENER PLATE
SCALE: 3" = 1'-0"

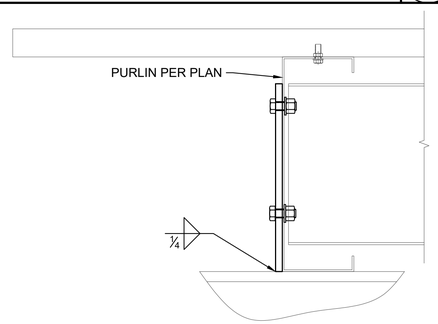

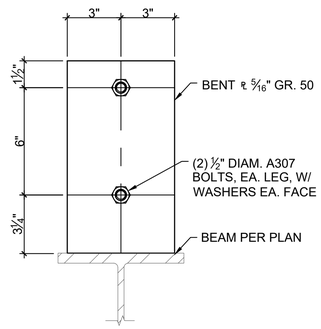

12 BEAM TO PURLIN CONN.
SCALE: 3" = 1'-0"

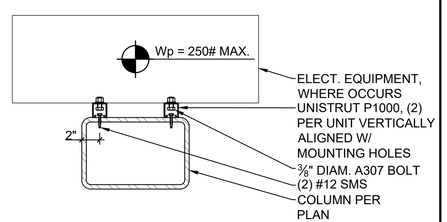

14 EQUIPMENT MOUNTING
SCALE: 1½" = 1'-0"

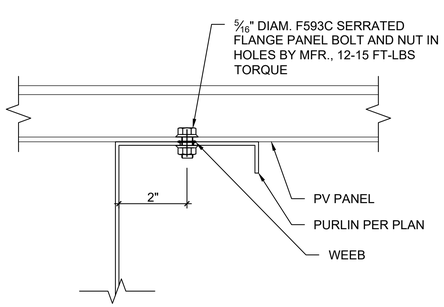

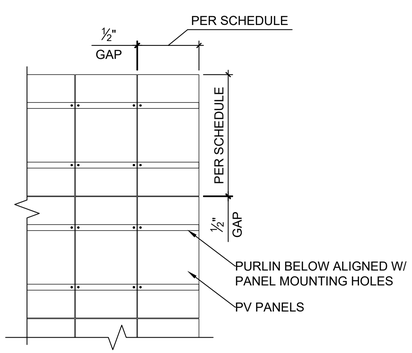

17 PV PANEL ATTACHMENT
SCALE: 6" = 1'-0"

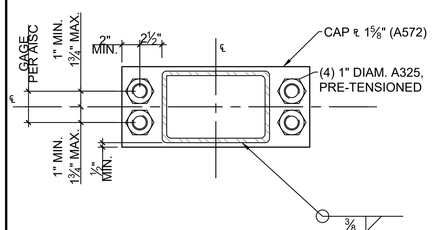

19 CAP PLATE
SCALE: 1½" = 1'-0"

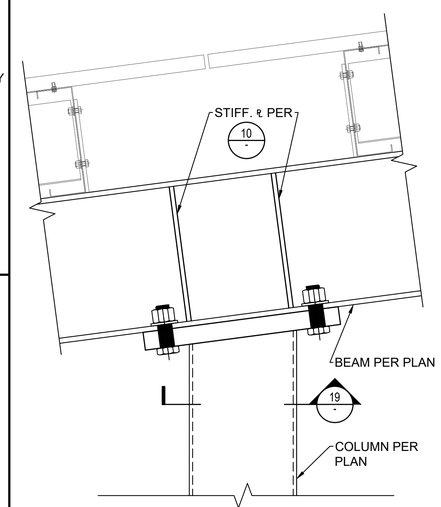

20 BEAM TO COLUMN CONN.
SCALE: 1½" = 1'-0"

SYSTEM HOST

MALAGA COUNTY WATER DISTRICT
SERVING HOME AND INDUSTRY

3580 S. FRANK ST
FRESNO, CA 93725
559-485-7353

SYSTEM DEVELOPER

sitelogiQ

1512 SILICA AVE
SACRAMENTO, CA 95815
916-988-8808

ELECTRICAL CONSTRUCTORS AND ENGINEERS

BLYMYER ENGINEERS

1101 MARINA VILLAGE PKWY
ALAMEDA, CA 94501
510-521-3773

STRUCTURAL ENGINEERING AND STEEL CONSTRUCT

TEICHERT SOLAR

10620 TREENA STREET, STE 140
SAN DIEGO, CA 92131
562-283-2970

ARCHITECT OF RECORD

M M P V d e s i g n

Mariana Moncada, Architect
718 West Arbor Drive
San Diego, CA 92103
619.632.2883

ARCHITECT / ENGINEER OF RECORD

PROJECT

MALAGA COMMUNITY PARK & RECREATION CENTER

3582 S WINERY AVE
FRESNO, CA 93725

NO.	REVISION	DATE

DATE:
07.14.23

SHEET TITLE

STEEL DETAILS

SHEET NO.:

S500

GENERAL NOTES

1. AT ALL TIMES THE CONTRACTOR WILL BE SOLELY AND COMPLETELY RESPONSIBLE FOR CONDITION OF JOB SITE, INCLUDING THE SAFETY OF ALL PERSONS AND PROPERTY AND FOR ALL NECESSARY INDEPENDENT ENGINEERING REVIEWS OF THESE CONDITIONS. THE ENGINEERS JOB SITE REVIEW IS NOT INTENDED TO INCLUDE REVIEW OF THE ADEQUACY OF THE CONTRACTORS SAFETY MEASURES.
2. THE CONTRACTOR SHALL MAKE AN EXAMINATION OF THE SITE AND COMPARE THE SITE WITH THE DRAWINGS AND SPECIFICATIONS AND SATISFY HIMSELF AS TO CONDITIONS UNDER WHICH WORK IS TO BE PERFORMED. THE CONTRACTOR SHALL ASCERTAIN AND CHECK THE LOCATIONS OF ANY EXISTING STRUCTURES OR EQUIPMENT WHICH MAY AFFECT WORK THAT HAS TO BE PERFORMED, NO ALLOWANCE SHALL SUBSEQUENTLY BE MADE IN CONTRACTOR'S BEHALF FOR ANY EXPENSE TO WHICH THE CONTRACTOR MAY BE PUT DUE TO FAILURE OR NEGLECT BY CONTRACTOR TO MAKE SUCH EXAMINATION.
3. ALL WORK SHALL BE COORDINATED WITH THE OWNER TO MAINTAIN CONTINUITY OF SERVICE AND MAXIMUM UTILIZATION OF THE OWNERS FACILITY.
4. THE CURRENT ISSUE OF ALL NFPA, IBC, IFC, ANSI, OSHA, ASTM, NEMA, AND OTHER NATIONALLY PUBLISHED CODES OR STANDARDS SHALL APPLY TO THIS WORK UNLESS LOCAL JURISDICTION SUPERSEDES. THE MOST STRINGENT CODES SHALL APPLY.
5. NOTHING IN THE DRAWINGS OR SPECIFICATIONS IS INTENDED TO ALLOW A VIOLATION OF ELECTRICAL WORKING SPACE AROUND ELECTRICAL EQUIPMENT REQUIREMENT. ANY DEVIATION FROM THIS REQUIREMENT SHALL BE APPROVED IN WRITING, BY THE ENGINEER. THE CONTRACTOR SHALL RELOCATE ANY EQUIPMENT IN VIOLATION OF THE ELECTRICAL CODE AT HIS OWN COST.
6. PROVIDE PHENOLIC NAMEPLATE WITH WHITE LETTERING ON BLACK BACKGROUND FOR EACH ELECTRICAL EQUIPMENT. PROVIDE PERMANENT MEANS OF ATTACHMENT THAT WILL NOT VIOLATE NEMA RATING OR EQUIPMENT WARRANTY.
7. REFER TO THE DRAWINGS FOR LOCATIONS AND SPACE REQUIREMENTS OF ELECTRICAL EQUIPMENT. COORDINATE THE INSTALLATION OF ELECTRICAL EQUIPMENT WITH OTHER TRADES.
8. POWER FEEDERS MAY NOT BE SHOWN ON THE DRAWINGS. REFER TO THE SINGLE LINE DIAGRAM FOR FEEDER INFORMATION.
9. CONTRACTOR SHALL SECURE AND PAY FOR ELECTRICAL TRADE SPECIFIC CONSTRUCTION PERMITS, LICENSES, GOVERNMENTAL AND INSPECTION FEES NECESSARY FOR THE EXECUTION OF THE WORK, UNLESS OTHERWISE DIRECTED.
10. ELECTRICAL CONTRACTOR SHALL PROVIDE COMPLETE ELECTRICAL INSTALLATION IN ACCORDANCE WITH ESTABLISHED TECHNIQUES AND ACCEPTED PRACTICES AND ALL LOCAL, STATE, AND NATIONAL CODES HAVING JURISDICTION.
11. ELECTRICAL REQUIREMENTS SUCH AS CONDUIT ROUTING AND LOCATIONS OF ELECTRICAL DEVICES (RECEPTACLES, SWITCHES, FLOOR OUTLETS, CONDUIT STUBS, ETC.) SHOWN ON THESE PLANS ARE DIAGRAMMATIC AND SUBJECT TO VERIFICATION BY ELECTRICAL CONTRACTOR FOR THE INTERFACING OF THE ELECTRICAL WORK WITH THE INSTALLATION. CONTRACTOR SHALL MAKE FIELD ADJUSTMENTS TO CLEAR THE OTHER FACILITIES EXCEPT AS SHOWN DIMENSIONED ON THE ARCHITECTURAL DRAWINGS OR AS APPROVED BY THE ARCHITECT.
12. ELECTRICAL EQUIPMENT SHOWN OR SPECIFIED FOR THIS PROJECT HAS BEEN GENERALLY SELECTED BASED ON DIMENSIONS TO FIT THE SPACE. THE CONTRACTOR SHALL VERIFY EQUIPMENT DIMENSIONS AND/OR ANY INTERFERENCES PRIOR TO ORDERING THE EQUIPMENT.
13. MANUFACTURER'S RECOMMENDATIONS FOR CONDUCTOR SIZING, CIRCUIT BREAKER OR FUSE RATING OF ELECTRICALLY OPERATED EQUIPMENT MAY DIFFER FROM THOSE INDICATED ON DRAWINGS. CONTRACTOR SHALL CONFIRM RATINGS PRIOR TO ORDERING EQUIPMENT.
14. CONTRACTOR SHALL REVIEW THE MECHANICAL AND PLUMBING DRAWINGS IF APPLY, AND CONNECT ELECTRICALLY OPERATED EQUIPMENT UNLESS OTHERWISE NOTED. COORDINATE THE LOCATION AND ELECTRICAL CONNECTION REQUIREMENTS PRIOR TO ORDERING OF ELECTRICAL AND MECHANICAL EQUIPMENT.
15. CONTRACTOR SHALL REVIEW THE SECTIONS OF EACH DIVISION OF THE SPECIFICATION (WHERE APPROPRIATE) AND PROVIDE CONNECTIONS TO ELECTRICALLY OPERATED EQUIPMENT AS MAY BE SPECIFIED THEREIN.
16. ALL CONDUIT ONLY (CO) NOTED SHALL HAVE PULL ROPES OR WIRES INSTALLED, TENSILE STRENGTH MINIMUM OF 200 FT/LBS.
17. COORDINATE ALL UG PULLBOX LOCATIONS WITH THE CIVIL AND LANDSCAPE PLANS. REPORT AND RESOLVE ANY DISCREPANCIES PRIOR TO START OF WORK.
18. ALL ELECTRICAL MATERIALS AND EQUIPMENT SHALL BE LISTED BY UNDERWRITER'S LABORATORIES OR OTHER APPROVED NRTL, AND SHALL BEAR THEIR LABEL. ALL CONTROL PANELS SHALL BE SO LISTED AS AN ASSEMBLY.
19. ELECTRICAL EQUIPMENT AND FEEDERS SHALL BE SUPPORTED AND/OR ANCHORED IN ACCORDANCE WITH CBC SEISMIC REQUIREMENTS. DO NOT SUPPORT CONDUITS FROM MECHANICAL DUCTS, PLUMBING, PIPING, OR EQUIPMENT OF ANY KIND.
20. THE CONTRACTOR SHALL FURNISH ALL LABOR, MATERIALS, FEES AND EQUIPMENT SPECIFIED. INDICATED OR IMPLIED IN THESE DOCUMENTS TO ACCOMPLISH THE CONSTRUCTION IN A PROFESSIONAL, WORKMANLIKE MANNER. ANY DISCREPANCIES BETWEEN THE CONSTRUCTION TASKS INDICATED AND LOCAL CODES AND/OR ORDINANCES SHALL BE BROUGHT TO THE IMMEDIATE ATTENTION OF THE GENERAL CONTRACTOR AND/OR OWNER FOR RESOLUTION BEFORE PROCEEDING WITH THE WORK AT ISSUE.
21. THE CONTRACTOR SHALL CONSULT THE MECHANICAL, STRUCTURAL, AND OTHER DRAWINGS AND DOCUMENTATION RELATED TO THE PROJECT FOR ADDITIONAL WORK TO BE PROVIDED.
22. THE OWNER RETAINS FIRST SALVAGE RIGHTS TO ALL EXISTING EQUIPMENT REMOVED UNDER THIS CONTRACT. THE ELECTRICAL CONTRACTOR SHALL CONSULT WITH THE OWNER FOR DISPOSITION OF THE EXISTING EQUIPMENT TO BE REMOVED.
23. ANY WORK INSTALLED INCORRECTLY, OR BEFORE APPROVAL HAS BEEN OFFICIALLY GRANTED FOR THOSE ITEMS AT ISSUE, SHALL BE CORRECTED BY THE ELECTRICAL CONTRACTOR AT NO CHARGE TO OWNER/ARCHITECT/CLIENT.
24. ALL MATERIALS AND EQUIPMENT FURNISHED BY THE CONTRACTOR SHALL BE NEW AND COMPLETELY SERVICEABLE UNLESS OTHERWISE SPECIFIED.
25. CONTRACTOR SHALL COORDINATE ROUGH-IN AND FINAL CONNECTION REQUIREMENTS WITH THE OWNER, EQUIPMENT SUPPLIERS, GENERAL CONTRACTOR AND OTHER BUILDING TRADES BEFORE PROCEEDING WITH ANY FURTHER RELATED WORK. INSTALLATIONS SHALL BE IN FULL ACCORDANCE WITH EQUIPMENT MANUFACTURER'S RECOMMENDATIONS AND REQUIRED CODES. CONFLICTS AND INTERFERENCES SHALL BE RESOLVED IMMEDIATELY, BEFORE ANY INSTALLATION BEGINS.
26. FINAL ACCEPTANCE OF WORK IN PLACE SHALL BE SUBJECT TO APPROVAL BY OWNER'S REPRESENTATIVE AND ARCHITECT/ENGINEER. INSTALLATION APPROVAL SHALL BE BASED ON APPROVED SUBMITTALS, SHOP DRAWINGS AND LOCAL INSPECTION.
27. CONTRACTOR SHALL SUBMIT "FOR RECORD" MARKUP DRAWINGS WITHIN TWO (2) WEEKS AFTER DATE OF NOTIFICATION OF FINAL APPROVAL OF WORK-IN-PLACE. CONTRACTOR'S FINAL INVOICE WILL NOT BE PAID WITHOUT COMPLETE DOCUMENTATION.
28. CONTRACTOR SHALL WARRANT ALL WORKS FOR A PERIOD OF ONE (1) YEAR FROM DATE OF ACCEPTANCE OF WORK-IN-PLACE. CONTRACTOR SHALL REPAIR OR REPLACE ANY DEFECTIVE WORK INCLUDING MATERIALS AND EQUIPMENT AT NO ADDITIONAL COST TO THE OWNER WITHIN WARRANTY PERIOD.
29. THE CONTRACTOR SHALL PROVIDE ALL FUSES AND OVERLOAD HEATER ELEMENTS REQUIRED FOR THIS CONTRACT INSTALLATION INCLUDING ANY FUSES BLOWN DURING INITIAL TESTING.
30. ELECTRICAL CONTRACTOR SHALL BE RESPONSIBLE FOR DAMAGES TO ALL WALLS, FLOORS AND PAVING. IF DAMAGE OCCURS DURING CONSTRUCTION, ELECTRICAL CONTRACTOR SHALL COORDINATE WITH OWNER TO PATCH, PAINT AND REPAIR TO MATCH EXISTING CONDITIONS.
31. CONDUIT AND WIRE SCHEDULE FOR NEW EQUIPMENT ARE GENERALLY INDICATIVE. CONTRACTOR SHALL REFER TO MANUFACTURER AND SUPPLIER OF EQUIPMENT FOR DETAILED WIRING DIAGRAM AND VERIFY THE EXACT ROUTING AND CONDUCTOR SIZE.
32. THE CONTRACTOR SHALL REFER TO MANUFACTURER AND SUPPLIER OF ELECTRICAL CONTROL EQUIPMENT FOR EXACT WIRING INTERCONNECTION.
33. ALL CONDUCTORS SHALL BE ALUMINUM OR COPPER STRANDED, AND HAVE INSULATION TEMPERATURE RATING NOT LESS THAN 90°C, UNLESS OTHERWISE NOTED.
34. IDENTIFICATION OF GROUNDED CONDUCTORS SHALL BE IN ACCORDANCE WITH NEC 200.6. IDENTIFICATION OF EQUIPMENT GROUNDING CONDUCTORS SHALL BE IN ACCORDANCE WITH NEC 250.119. IDENTIFICATION OF UNGROUNDED CONDUCTORS SHALL BE IN ACCORDANCE WITH NEC 210.5(C) AND SHALL BE IDENTIFIED BY THE FOLLOWING COLORED INSULATION, MARKING TAPE, OR TAGGING AS FOLLOWS:

SYSTEM	480Y/277V	208Y/120V	120/240V 1-PHASE
PHASE A	BROWN	BLACK	BLACK (LINE 1)
PHASE B	ORANGE	RED	RED (LINE 2)
PHASE C	YELLOW	BLUE	

PV OUTPUT CIRCUIT	NEGATIVE GROUNDED SYSTEM	UNGROUNDED SYSTEM
POSITIVE (+)	RED	RED
NEGATIVE (–)	PER 200.6	BLACK

PV SOURCE CIRCUIT	NEGATIVE GROUNDED SYSTEM	UNGROUNDED SYSTEM
POSITIVE (+)	RED	RED
NEGATIVE (–)	PER 200.6	BLACK

35. USE WIRE IDENTIFICATION COLOR CODE PER SPECIFICATIONS BELOW.

COLOR	DESCRIPTION
LT. BLUE	INTRINSICALLY SAFE CIRCUITS
GREEN	EQUIPMENT GROUNDING CONDUCTOR
YELLOW	CONTROL CIRCUITS SUPPLIED FROM EXTERNAL POWER SOURCE, INTERLOCKS

36. MEDIUM VOLTAGE CABLE MARKINGS SHALL UTILIZE COLORED CONDUCTOR TAPE FOR ALL PHASES: YELLOW COLORED, SELF-ADHESIVE VINYL TAPE NOT LESS THAN 3 MILS THICK BY 1 INCH WIDE. 1 STRIPE FOR THE A PHASE CONDUCTOR, 2 STRIPES FOR THE B PHASE CONDUCTOR, 3 STRIPES FOR THE C PHASE CONDUCTOR. TAPE SHALL BE LOCATED AT ALL TERMINATIONS, SPLICES AND PULL BOXES.
37. THE ELECTRICAL ENGINEER OF RECORD SHALL PROVIDE REQUIRED SETTINGS FOR ALL ADJUSTABLE CIRCUIT BREAKERS AND RELAYS SPECIFIED IN THIS PROJECT. ARC FLASH LABELS SHALL ALSO BE PROVIDED FOR ALL NEW ELECTRICAL EQUIPMENT AS NEEDED. SETTINGS AND ARC FLASH LABELS ARE TYPICALLY SHOWN IN NEW ELECTRICAL SYSTEM STUDIES, BUT MAY INSTEAD BE PROVIDED IN THE PROJECT DRAWINGS OR VIA RFI. CONTRACTOR SHALL VERIFY ALL CIRCUIT BREAKER AND RELAY SETTINGS ARE PROVIDED AND HAVE BEEN APPLIED ONSITE. IF SETTINGS ARE NOT PROVIDED, CONTRACTOR SHALL REQUEST THEM FROM THE ENGINEER OF RECORD.
39. OUTDOOR SITE LIGHTING SHALL COMPLY WITH DARK SKY GUIDELINES.
40. TAMPER-RESISTANT RECEPTACLES SHALL BE INSTALLED IN ALL DWELLING UNITS AS REQUIRED IN NEC 406.12.

ABBREVIATIONS

A, AMPS	AMPERES
A/C	AIR CONDITIONER
AC	ALTERNATING CURRENT
AF	AMPERE FRAME
AIC	AMPERE INTERRUPTING CURRENT
AL	ALUMINUM
AT	AMPERES TRIP
ATS	AUTOMATIC TRANSFER SWITCH
AWG	AMERICAN WIRE GAUGE
BC	BARE COPPER
BESS	BATTERY ENERGY STORAGE SYSTEM
BLDG	BUILDING
BMS	BUILDING MANAGEMENT SYSTEM
C	CONDUIT
CB	CIRCUIT BREAKER
CC	CENTER TO CENTER
CKT	CIRCUIT
℄	CENTER LINE
CLG	CEILING
CLR	CLEAR
CO	CONDUIT ONLY WITH PULL ROPE
CONC	CONCRETE
CU	COPPER
DB	DIRECT BURIAL
DC	DIRECT CURRENT
DIA	DIAMETER
DN	DOWN
DWG	DRAWING
EM	EMERGENCY
EMT	ELECTRICAL METALLIC TUBING
EPO	EMERGENCY POWER OFF
EQ	EQUAL
EQUIP	EQUIPMENT
(E)	EXISTING
FA	FIRE ALARM
FACP	FIRE ALARM CONTROL PANEL
FLA	FULL LOAD AMPERES
(F)	FUTURE
GND	GROUND
GALV	GALVANIZED
GRS	GALVANIZED RIGID STEEL
GFCI	GROUND FAULT CIRCUIT INTERRUPTER
GFP	GROUND FAULT PROTECTION
HH	HANDHOLE
HP	HORSEPOWER
HV	HIGH VOLTAGE
HVAC	HEATING, VENTILATION, AIR CONDITIONING
HZ	HERTZ
IMC	INTERMEDIATE METAL CONDUIT
ISC	INTERRUPTING SHORT CIRCUIT
INST	INSTANTANEOUS
JB	JUNCTION BOX
KAIC	KILO AMPERES INTERRUPTION CAPACITY
KCMIL	KILO CIRCULAR MILS
KV	KILOVOLTS
KVA	KILOVOLT-AMPERES
KWH	KILO WATT-HOURS
LCP	LIGHTING CONTROL PANEL
LTG	LIGHTING
MAX	MAXIMUM
MCC	MOTOR CONTROL CENTER
MCB	MAIN CIRCUIT BREAKER
MCP	MOTOR CIRCUIT PROTECTOR
MFR	MANUFACTURER
MH	MANHOLE
MIN	MINIMUM
MISC	MISCELLANEOUS
MLO	MAIN LUGS ONLY
MTD	MOUNTED
MSBD	MAIN SWITCHBOARD
MSGR	MAIN SWITCHGEAR
MV	MEDIUM VOLTAGE
MVA	MEGAVOLT-AMPERES
(N)	NEW
N	NEUTRAL
NC	NORMALLY CLOSED
NIC	NOT IN CONTRACT
NO	NORMALLY OPEN
NTS	NOT TO SCALE
OFCI	OWNER FURNISHED CONTRACTOR INSTALLED
OH	OVERHEAD
PH, ϕ	PHASE
PB	PUSHBUTTON
PDU	POWER DISTRIBUTION UNIT
PNL	PANEL
POCC	POINT OF COMMON CONNECTION
PV	PHOTOVOLTAIC
PVC	POLYVINYL CHLORIDE
(R)	EXISTING TO BE REMOVED
(RE)	NEW LOCATION OF RELOCATED DEVICE
(RL)	EXISTING TO BE RELOCATED
SCA	SHORT CIRCUIT AVAILABLE
SEC	SECONDARY
SPECS	SPECIFICATIONS
STD	STANDARD
STP	SHIELDED TWISTED PAIR
SWBD	SWITCHBOARD
SWGR	SWITCHGEAR
SYM	SYMMETRICAL
TBD	TO BE DETERMINED
TD	TIME DELAY
TEL	TELEPHONE
TVSS	TRANSIENT VOLTAGE SURGE SUPPRESSION
TYP	TYPICAL
UG	UNDERGROUND
UL	UNDERWRITERS LABORATORIES
UON	UNLESS OTHERWISE NOTED
UPB	UNDERGROUND PULLBOX
UPS	UNINTERRUPTIBLE POWER SUPPLY
UTP	UNSHIELDED TWISTED PAIR
V	VOLTS
VA	VOLT-AMPERES
VFD	VARIABLE FREQUENCY DRIVE
VFI	VACUUM FUSED INTERRUPTER
VP	VAPORPROOF
W	WATTS, WIRE
WP	WEATHERPROOF
WT	WATERTIGHT
XFMR	TRANSFORMER
XLPE	CROSS-LINKED POLYETHYLENE
XP	EXPLOSION PROOF

ELECTRICAL SYMBOLS

POWER

- EXPOSED CONDUIT OR CABLE
- CONDUIT (UNDERGROUND OR CONCEALED IN FLOOR, WALL, OR CEILING)
- JUNCTION BOX WITH COVER
- PULL BOX WITH SCREW (HINGED) COVER
- 52 CIRCUIT BREAKER, INSCRIBED NUMBER INDICATES IEEE DEVICE NUMBER
- LED FIXTURE
- POST TOP MOUNTED FIXTURE
- KEYED NOTE

SCHEMATIC

- NON-FUSIBLE LOAD INTERRUPTER SWITCH, AIR INSULATED
- FUSIBLE LOAD INTERRUPTER SWITCH, AIR INSULATED
- CIRCUIT BREAKER, MOLDED CASE
- MOTOR CIRCUIT PROTECTOR
- CIRCUIT BREAKER WITH CURRENT LIMITING FUSES – SIZE AS SHOWN
- CIRCUIT BREAKER, DRAW-OUT TYPE
- GFR 52 MAIN CIRCUIT BREAKER W/ GFR
- MOTOR OVERLOAD RELAY
- NORMALLY OPEN CONTACT
- NORMALLY CLOSED CONTACT
- BUS DUCT (SINGLE LINE ONLY)
- W/H WATT/HOUR REVENUE METER
- VAR/H VOLTAMPERES REACTIVE REVENUE METER
- NEUTRAL DISCONNECT LINK
- TRANSFORMER
- ZIG ZAG TRANSFORMER
- HIGH VOLTAGE CABLE TERMINATION
- GROUNDING ELECTRODE
- XXXXX CIRCUIT CALLOUT
- 52 ANSI/IEEE DEVICE NUMBER

QUALITY ASSURANCE NOTES

1. FOLLOW AND ADHERE TO ALL MANUFACTURERS INSTALLATION INSTRUCTIONS.
2. ALL BACKFILL AND COMPACTION SHALL COMPLY WITH GEOTECH REPORT.
3. ALL ELECTRICAL TERMINATIONS SHALL BE TORQUED TO MANUFACTURERS' SPECIFICATIONS. WHERE THEY ARE NOT SPECIFIED, REFER TO UL STANDARDS 486A AND 486B. FINAL TORQUE TEST DOCUMENTATION SHALL BE PROVIDED TO OWNER OR HIS REPRESENTATIVE, WITH ONE OR THE OTHER IN WITNESS AT RANDOM TIMES.
4. LINE AND LOAD CONDUCTORS SHALL BE BRACED AND SUPPORTED (LASHED, HELD FIRMLY IN PLACE) IN ACCORDANCE WITH THE EQUIPMENT MANUFACTURER'S SPECIFICATIONS AND NECA/IBEW APPROVED INSTALLATION PRACTICES.
5. COMPRESSION CONNECTORS SHALL BE CRIMPED ACCORDING TO THE MANUFACTURER'S INSTALLATION INSTRUCTIONS, USING MANUFACTURER-APPROVED TOOLS AND DIES. ALWAYS TUG-TEST ALL TERMINATIONS AFTER COMPLETION.
6. LISTED OXIDE INHIBITOR MUST BE APPLIED TO ALL ALUMINUM WIRE TERMINATIONS. LUGS USED WITH ALUMINUM WIRE MUST BE LISTED FOR USE WITH ALUMINUM, OR BE MARKED DUAL-RATED (AL9CU).
7. CORROSION POTENTIAL IN OUTDOOR ELECTRICAL CONNECTIONS SUCH AS GROUNDING AND BONDING CONNECTIONS SHOULD BE REDUCED BY MINIMIZING CONTACT BETWEEN DISSIMILAR METALS. WITHIN 1 MILE OF THE OCEAN, APPLICATION OF OUTDOOR ELECTRICAL JOINT COMPOUND BETWEEN DISSIMILAR METAL CONNECTIONS IS RECOMMENDED. ALL LUGS AND TERMINATION DEVICES USED OUTDOORS MUST BE LISTED FOR DIRECT BURIAL OR OUTDOOR USE.

MOUNTING HEIGHTS

MOUNTING HEIGHTS SHALL BE TO BOTTOM OF BOX, UNLESS OTHERWISE NOTED.

RECEPTACLES	18"	VOLUME CONTROLS	MAX. 48" TO TOP
RECEPTACLE WIREWAYS	43"	THERMOSTATS	MAX. 48" TO TOP
SWITCHES	MAX. 48" TO TOP	TELE/COMMUNICATION OUTLET	15" MIN. TO BOTTOM
MOTOR STARTERS, TO TOP	72"	PANELBOARDS, TO TOP	72"
DISCONNECTS, TO TOP	72"	CABINETS, TO TOP	72"
JUNCTION BOXES	15" MIN.	FIRE ALARM PULL STATIONS	MAX 48" TO TOP

ACCEPTANCE TESTING

THE FOLLOWING TESTS SHALL BE PERFORMED PRIOR TO ENERGIZATION OF THE SYSTEM WHEN APPLICABLE: TEST RESULTS SHALL BE MADE AVAILABLE TO THE ENGINEER OF RECORD OR BUILDING OFFICIAL UPON REQUEST.

1. GROUND-FAULT PROTECTION EQUIPMENT
   - 1.1 VERIFY PICKUP AND TIME DELAY SETTINGS ARE IN ACCORDANCE WITH SETTINGS PROVIDED BY THE ENGINEER OR EQUIPMENT MANUFACTURER.
2. ELECTRICAL TESTS SWITCHBOARDS, PANELBOARDS, MOTOR CONTROL CENTERS AND OTHER EQUIPMENT RATED 1000 AMPERES OR MORE, OR OVER 1000 VOLTS.
   - 2.1. RELAY PICKUP CURRENT BY CURRENT INJECTION AT THE SENSOR AND OPERATION OF THE CIRCUIT INTERRUPTING DEVICE
   - 2.2. TEST RELAY TIMING.
   - 2.3. TEST PRIMARY CONTROL VOLTAGE AT NOT MORE THAN 57 PERCENT OF ITS RATED VOLTGROUNDED CONDUCTOR INSULATION RESISTANCE
   - 2.4. VERIFICATION OF CONTINUITY OF EQUIPMENT GROUNDING SYSTEM.
   - 2.5. INSULATION RESISTANCE TEST ON EACH BUS AND PROTECTIVE DEVICE, PHASE-TO-PHASE AND PHASE-TO-GROUND.
   - 2.6. DIELECTRIC VOLTAGE-WITHSTAND TEST ON EACH BUS AND PROTECTIVE DEVICE, PHASE-TO-PHASE AND PHASE-TO-GROUND.
   - 2.7. CONTROL POWER TRANSFORMER, CONTROL POWER CIRCUITS AND POTENTIAL CIRCUITS.
   - 2.8. CONTROL AND PROTECTIVE DEVICES FOR PROPER OPERATION.
3. ELECTRICAL TESTS ON TRANSFORMERS RATED 100 KVA OR MORE SINGLE PHASE AND 300 KVA OR MORE THREE PHASE.
   - 3.1. INSULATION RESISTANCE TEST ON EACH WINDING. TEST WINDING-TO-WINDING AND WINDINGS-TO-GROUND.
   - 3.2. TURNS-RATIO TEST FOR EACH WINDING AT ALL TAP SETTINGS.
   - 3.3. CONTROL POWER TRANSFORMER, CONTROL POWER CIRCUITS AND POTENTIAL CIRCUITS.
   - 3.4. CONTROL AND PROTECTIVE DEVICES FOR PROPER OPERATION.
4. INSULATION RESISTANCE TEST ON EACH CONDUCTOR, PHASE-TO-PHASE AND PHASE-TO-GROUND FOR ALL AC CONDUCTORS
   - 4.1. VLF TESTING FOR MEDIUM VOLTAGE CONDUCTORS
   - 4.2. MEGGER TESTING FOR LOW VOLTAGE CONDUCTORS
5. ELECTRICAL TESTS ON EMERGENCY AND STANDBY POWER SYSTEMS: SWITCHBOARDS, PANELBOARDS, DISTRIBUTION BOARDS, TRANSFER EQUIPMENT, POWER SOURCE, CONDUCTORS, FIRE PUMPS, EXHAUST AND VENTILATION FANS.
   - 5.1. CONTROL AND PROTECTIVE DEVICES FOR PROPER OPERATION.
   - 5.2. PHASE ROTATION TEST
   - 5.3. INSULATION RESISTANCE TEST ON FEEDER CONDUCTORS AND EQUIPMENT, PHASE-TO-PHASE AND PHASE-TO-GROUND
   - 5.4. AUTOMATIC LOAD TRANSFER TEST. TEST NORMAL AND EMERGENCY POWER, OR NORMAL AND STANDBY POWER, OR BOTH. SIMULATE LOSS OF EMERGENCY AND NORMAL POWER OR STANDBY AND POWER, OR BOTH. SIMULATE ALL FORMS OF SINGLEPHASE CONDITIONS.
   - 5.5. CONDUCT OPERATIONAL TEST ON SYSTEM UNDER LOAD CONDITIONS.
6. USING A PV MODULE TEST KIT (SEWARD OR EQUIVALENT EQUIPMENT), PERFORM VOC, ISC, AND INSULATION RESISTANCE TESTING ON ALL PV MODULE STRINGS.
7. INVERTER TESTING
   - 7.1. LINE TO LINE VOLTAGE
   - 7.2. LINE TO NEUTRAL VOLTAGE
   - 7.3. ALL COMMISSIONING STEPS LISTED IN INSTALLATION MANUAL PROVIDED BY MANUFACTURER

EQUIPMENT SPECIFICATIONS

THE FOLLOWING EQUIPMENT SPECIFICATION AND SUBMITTALS SHALL BE PROVIDED TO AND APPROVED BY THE ENGINEER OF RECORD PRIOR TO INSTALLATION:

- ELECTRICAL EQUIPMENT INCLUDING: SWITCHGEAR, PANELBOARDS, MOTOR CONTROL CENTERS, AND SAFETY SWITCHES.
- CONDUCTORS AND CABLES INCLUDING: MEDIUM VOLTAGE CABLES, LOW VOLTAGE CABLES, PV DC WIRING, AND CONTROL CABLES.
- COMMUNICATION CABLES SUCH AS RS-485/EIA-485 CABLE, ETHERNET CABLE, AND FIBER OPTIC CABLE.
- SCADA DEVICES SUCH AS DATA ACQUISITION SYSTEM, RTU, RTAC, OR CONTROLLER.
- PROTECTIVE DEVICES INCLUDING: CIRCUIT BREAKERS (INCLUDING TRIP UNITS IF PRESENT), FUSES, AND RELAYS.
- PV EQUIPMENT INCLUDING: SOLAR MODULE, UL2703 SOLAR MOUNTING SYSTEM, TRANSFORMERS, INVERTERS, COMBINER BOXES, RECOMBINER BOXES, AND RAPID SHUTDOWN BOXES. ALSO SUBMIT DEVICES NOT INTEGRAL TO THE SOLAR MODULE MOUNTING SYSTEM, SUCH AS MODULE GROUNDING LUGS OR DEVICES.
- CABLE TRAY INCLUDING WIRE AND TRAY SIZING CALCULATIONS

SYSTEM HOST

MALAGA COUNTY WATER DISTRICT – SERVING HOME AND INDUSTRY

3580 S. FRANK ST
FRESNO, CA 93725
559-485-7353

SYSTEM DEVELOPER

sitelogiQ

1512 SILICA AVE
SACRAMENTO, CA 95815
916-988-8808

ELECTRICAL CONSTRUCTORS AND ENGINEERS

BLYMYER ENGINEERS

1101 MARINA VILLAGE PKWY
ALAMEDA, CA 94501
510-521-3773

STRUCTURAL ENGINEERING AND STEEL CONSTRUCT

TEICHERT SOLAR

10620 TREENA STREET, STE 140
SAN DIEGO, CA 92131
562-283-2970

ARCHITECT OF RECORD

M M P V d e s i g n

Mariana Moncada, Architect
718 West Arbor Drive
San Diego, CA 92103
619.632.2883

ARCHITECT / ENGINEER OF RECORD

PROJECT

MALAGA COMMUNITY PARK & RECREATION CENTER

3582 S WINERY AVE
FRESNO, CA 93725

NO.	REVISION	DATE

DATE: 07.14.23

SHEET TITLE

GENERAL ELECTRICAL NOTES

SHEET NO.:

E-1.0

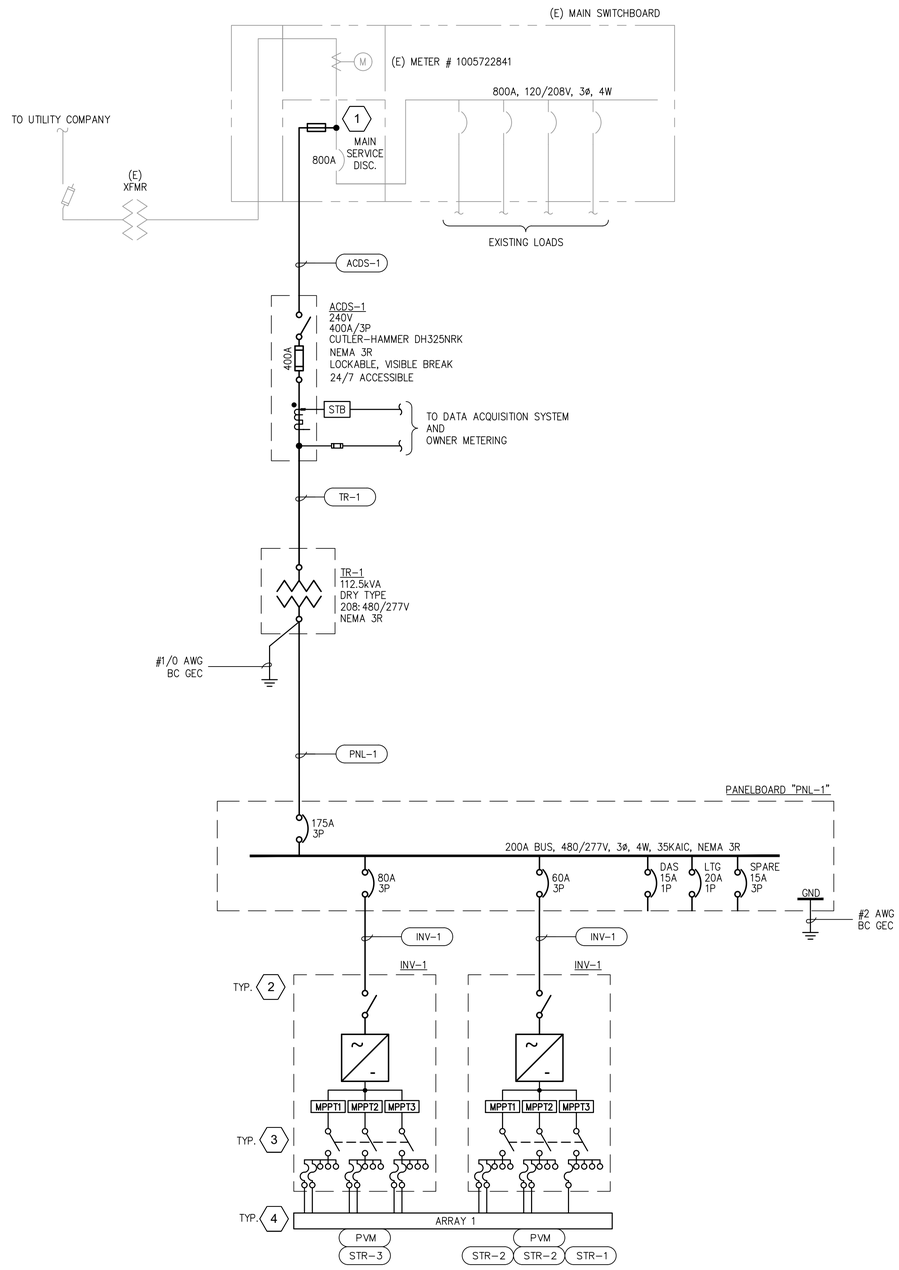

1 SINGLE LINE DIAGRAM

SCALE: NTS

SYSTEM SUMMARY

PROJECT LOCATION	3852 S WINERY AVE, FRESNO, CA 93725
MIN DESIGN TEMPERATURE	-3.3°C
MAX 2% DESIGN TEMPERATURE	40.1°C
PV MODULE	CS6W-540MB-AG
PV MODULE WATTAGE @ STC	540
PV MODULE COUNT	182
DC SYSTEM SIZE	98.28 KW DC
AC SYSTEM SIZE	86 KW / 86 KVA
INVERTER TYPE & COUNT	(1) CPS SCA36KTL-DO/US-480
INVERTER TYPE & COUNT	(1) CPS SCA50KTL-DO/US-480 (50kVA)

GENERAL NOTES

1. ALL EQUIPMENT SHALL BE UL LISTED.
2. INSTALLATION SHALL BE IN ACCORDANCE WITH LATEST ELECTRICAL AND BUILDING CODES. AHJ HAS FINAL JURISDICTIONAL AUTHORITY ON CODE APPLICATION AND COMPLIANCE.
3. ALL INVERTER WIRING AND GROUNDING METHODS SHALL CONFORM TO THE MANUFACTURER'S RECOMMENDED PRACTICES. REFER TO PLANNING & INSTALLATION MANUAL FOR THIS GUIDANCE.
4. ALL DISCONNECTS SHALL BE LABELED "WARNING – ELECTRIC SHOCK HAZARD – DO NOT TOUCH TERMINALS" AND "TERMINALS ON BOTH LINE AND LOAD SIDES MAY BE ENERGIZED IN THE OPEN POSITION" PER NEC 690.13(B).
5. EXPOSED NON–CURRENT CARRYING METAL PARTS OF MODULE FRAMES, EQUIPMENT AND ENCLOSURES SHALL BE GROUNDED IN ACCORDANCE WITH NEC 250.134 AND 250.136.
6. COORDINATE DATE, TIME, AND LENGTH OF ANY REQUIRED FACILITY SHUTDOWNS WITH OWNER PRIOR TO CONSTRUCTION.
7. LUGS SHALL BE DUAL RATED FOR COPPER/ALUMINUM CONDUCTORS
8. PANELBOARDS SHALL INCLUDE A SINGLE–POLE AIR GAP BETWEEN ALL INVERTER BREAKERS.
9. REFER TO SHEET(S) E–7.X FOR ELECTRICAL DETAILS
   REFER TO SHEET(S) E–9.X FOR WARNING LABELS AND LOCATIONS
   REFER TO SHEET(S) E–10.X FOR EQUIPMENT DATASHEETS
10. ALL EQUIPMENT SHALL HAVE ARC FLASH WARNING LABELS WITH APPLICABLE INCIDENT ENERGY LEVELS, WORKING DISTANCES, AND REQUIRED PPE IN ACCORDANCE WITH NFPA 70E.
11. PHOTOVOLTAIC MODULES TO BE GROUNDED USING FACTORY GROUND POINT ONLY, OR OTHER APPROVED UL LISTED MEANS/METHODS.
12. PV SYSTEM AND EQUIPMENT COMPLIANT WITH THE FOLLOWING NEC CODES:
    – POINT OF INTERCONNECTION PER NEC 705.11
    – INTEGRATED AC DISCONNECT PER NEC 705.20
    – LOCATION OF OVERCURRENT PROTECTION PER NEC 705.11(C)
    – DISCONNECTING OF PHOTOVOLTAIC MODULES PER NEC 690.15 FOR INVERTER INTEGRATED DC DISCONNECTS

KEYED NOTES:

1. CONNECT PV SYSTEM OUTPUT TO THE SUPPLY SIDE OF THE SERVICE DISCONNECTING MEANS, AS ALLOWED BY NEC 705.11. CONTRACTOR TO CONFIRM CONDITION AND RATING OF THE EXISTING SWITCHBOARD FOR SUPPLY SIDE TAP INSTALLATION, AND NOTIFY THE ENGINEER IN CASE OF DISCREPANCIES.
   CABLE LIMITERS SHALL BE INSTALLED AT TAP, IF THE OVERCURRENT PROTECTION IS MORE THAN 10 FEET FROM TAP.
2. INVERTER: CPS CHINT POWER FOR UNGROUNDED PV ARRAYS.
   – 480VAC, 3PH–3W, 1000VDC
   – NEMA 3R ENCLOSURE.
   – NO ISOLATION TRANSFORMER.
   – INTEGRATED AC DISCONNECT
   – UL1741 LISTED WITH INTEGRAL ANTI–ISLANDING PROTECTION.
   UL1741 LISTING INCLUDES COMPLIANCE WITH IEEE519 FOR POWER QUALITY, IEEE929 FOR INTERCONNECTION SAFETY AND NEC REQUIREMENTS.
3. DC DISCONNECT SWITCH
   – INTEGRATED GANG OPERATED DC SWITCH FOR ALL MPPTS.
   – MIN FUSE SIZE AS INDICATED IN PV MODULE TABLE.
   – DC DISCONNECT SWITCH SHALL COMPLY WITH NEC 690.15 REQUIREMENTS
   – REFER TO MANUFACTURER'S INSTALLATION INSTRUCTIONS FOR DETAILS.
4. DIVIDE CONNECTED STRINGS AS EVENLY AS POSSIBLE BETWEEN INVERTER MPPT UNITS. UNDER NO CIRCUMSTANCES SHOULD THE SUM OF STRING Isc CONNECTED TO AN MPPT UNIT EXCEED THE MAXIMUM Isc LISTED ON THE INVERTER DATASHEET.
   TOTAL VOLTAGE DROP FOR DC CIRCUITS SHALL NOT EXCEED 2%, OTHERWISE SIZE OF CONDUCTORS MAY HAVE TO BE INCREASED. CONTRACTOR SHALL NOTIFY ENGINEER IF ACTUAL ROUTING EXCEEDS THE DESIGNED MAXIMUM ONE–WAY DISTANCE.

INVERTER CONFIGURATION

INVERTER ID	INVERTER ARRAY	INVERTER MAKE & MODEL	INVERTER OCP	INVERTER KW	INVERTER KVA	STR-1 QTY	STR-2 QTY	STR-3 QTY	MODULES PER INVERTER	KW DC PER INVERTER
INV-1	1	CPS SCA50KTL-DO/US-480 (50kVA)	80/3P	50	50	0	0	6	108	58.32
INV-2	1	CPS SCA36KTL-DO/US-480	60/3P	36	36	1	4	0	74	39.96

AC SCHEDULE AND CALCULATIONS

* CONDUITS ARE MINIMUM REQUIRED SIZES; INSTALLED SIZES MAY BE LARGER, IF USED
** WIRE AMPACITY BASED ON WIRE TERMINAL TEMPERATURE RATING OR WIRE INSULATION TEMPERATURE RATING (WHICHEVER IS LOWER)

CIRCUIT ID	VOLTAGE	CURRENT	OCP	WIRE MATERIAL	WIRE INSULATION	PARALLEL SETS OF WIRES	PHASE CONDUCTORS PER SET	NEUTRAL CONDUCTOR PER SET	EGC PER SET	**WIRE AMPACITY	*MIN EMT (IN)	*MIN LFMC (IN)	*MIN RMC (IN)	*MIN PVC (IN)	DISTANCE (FT)	% VOLTAGE DROP
INV-1	480	60.2	80	Al	THWN-2	1	(3) #1 AWG	N/A	#6 AWG	100	1.25	1.25	1.25	1.25	50	0.27%
INV-2	480	43.5	60	Al	THWN-2	1	(3) #3 AWG	N/A	#8 AWG	75	1	1	1	1	15	0.09%
PNL-1	480	135.3	175	Al	THWN-2	1	(3) 300 kcmil	#4 AWG	#4 AWG	230	2.5	2.5	2.5	2.5	260	0.91%
TR-1	208	312.3	400	Al	THWN-2	2	(3) 350 kcmil	N/A	#1 AWG	250	2.5	2.5	2.5	2.5	20	0.16%
ACDS-1	208	312.3	400	Cu	THWN-2	2	(3) 250 kcmil	#3 AWG	#3 AWG	255	2	2	2	2	20	0.14%

DC SCHEDULE AND CALCULATIONS

*DESIGN TEMPERATURE BASED OFF OF -3.3°C LOW SITE TEMPERATURE. Voc (#/°C) = -0.26

CIRCUIT ID	# OF MODULES IN STRING	Voc	Vmp	Isc	Imp	KW @ STC	MIN FUSE SIZE	WIRE QTY & SIZE	WIRE AMPACITY AFTER DERATE	WIRE MATERIAL	WIRE INSULATION	MAX ONE-WAY DISTANCE	%VOLTAGE DROP
PVM	N/A	52.8	41.3	15.41	14.388	0.54	N/A	SEE MFR DATASHEET	N/A	SEE MFR DATASHEET	SEE MFR DATASHEET	N/A	N/A
STR-1	14	739.5	578.2	15.41	14.388	7.56	25	(2) #10 AWG (1) AWG #10 EGC	30.45	CU	PV WIRE	200	1.23%
STR-2	15	792.3	619.5	15.41	14.388	8.1	25	(2) #10 AWG (1) AWG #10 EGC	30.45	CU	PV WIRE	200	1.15%
STR-3	18	950.8	743.4	15.41	14.388	9.72	25	(2) #10 AWG (1) AWG #10 EGC	30.45	CU	PV WIRE	200	0.96%

NOTE: PV MODULE STC Imp and Isc ARE INCREASED BY 10% FACTOR TO ADDRESS BIFACIAL PERFORMANCE.

SYSTEM HOST

MALAGA COUNTY WATER DISTRICT – SERVING HOME AND INDUSTRY

3580 S. FRANK ST
FRESNO, CA 93725
559-485-7353

SYSTEM DEVELOPER

sitelogiQ

1512 SILICA AVE
SACRAMENTO, CA 95815
916-988-8808

ELECTRICAL CONSTRUCTORS AND ENGINEERS

BLYMYER ENGINEERS

1101 MARINA VILLAGE PKWY
ALAMEDA, CA 94501
510-521-3773

STRUCTURAL ENGINEERING AND STEEL CONSTRUCT

TEICHERT SOLAR

10620 TREENA STREET, STE 140
SAN DIEGO, CA 92131
562-283-2970

ARCHITECT OF RECORD

M M P V d e s i g n

Mariana Moncada, Architect
718 West Arbor Drive
San Diego, CA 92103
619.632.2883

ARCHITECT / ENGINEER OF RECORD

PROJECT

MALAGA COMMUNITY PARK & RECREATION CENTER

3582 S WINERY AVE
FRESNO, CA 93725

NO.	REVISION	DATE

DATE: 07.14.23

SHEET TITLE

SINGLE LINE DIAGRAM

SHEET NO.:

E-2.0

GENERAL NOTES

1 THE THREE LINE DIAGRAM IS SHOWN FROM **THE POINT OF INTERCONNECTION** TO THE FIRST INVERTER, AND IS INTENDED TO PROVIDE GENERAL GUIDANCE AND TYPICAL INVERTER DC CONFIGURATION.
REFER TO SINGLE LINE DIAGRAM FOR EQUIPMENT SPECIFICATIONS AND THE FULL SYSTEM REPRESENTATION.

KEYED NOTES:

1 SOLAR PHOTOVOLTAIC MODULES WIRED IN SERIES. EACH MODULE INCLUDES OUTDOOR RATED QUICK CONNECTOR FOR MODULE INTERCONNECTION.
DO NOT REMOVE THE QUICK CONNECTS, OTHERWISE THE MODULE WARRANTY AND U.L. LISTING MAY BE INVALIDATED.

2 BOND ELECTRICAL PANELS, AND INVERTER GND TERMINALS TO NEW ELECTRODE. USE UL LISTED IRREVERSIBLE COMPRESSION CONNECTORS OR EXOTHERMIC WELD PROCESS AS APPLICABLE.

3 GROUND ALL MODULES, USING UL LISTED **"BEACON"** GROUNDING CLIP WASHER AT EACH **"ZEE"** SOLAR MOUNTING CLIP, ALONG THE TOP ROW ONLY. REFER TO INSTALLATION MANUAL.
SEE PARTIAL GND PLAN ON DETAIL **5/E-7.1**.

4 INSTALL BONDING JUMPER #6 AWG CU BETWEEN SEPARATE PURLINS. #4 AWG CU SHALL BE USED TO BOND INVERTER'S GND TERMINAL, AND ZEE PURLINS IN DIFFERENT ROWS TO THE GE/STRUCTURE; AND WHERE REQUIRED TO BOND OTHER STRUCTURAL MEMBERS, TO ASSURE CONTINUITY OF GND CONNECTION.

5 AC DISCONNECT GEC TO CONNECT TO EXISTING GROUNDING ELECTRODE AT MAIN SWITCHGEAR. IF GROUNDING ELECTRODE IS NOT ACCESSIBLE, CONNECT THE NEW GEC TO THE EXISTING GEC OF THE MAIN SWITCHGEAR WITH THE IRREVERSIBLE SPLICE PER DETAILS **6,7,8/E-7.0**.

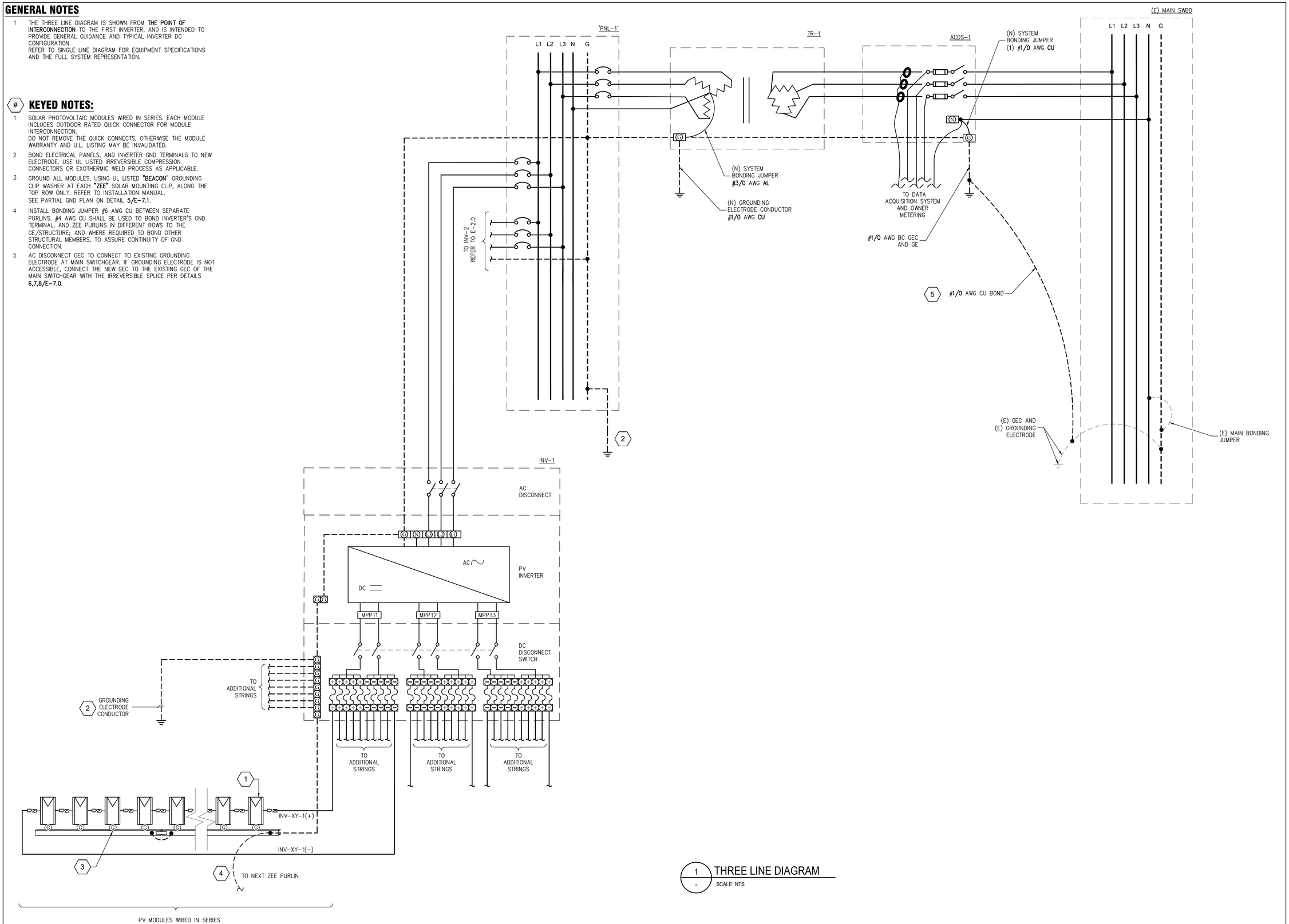

1 THREE LINE DIAGRAM
SCALE: NTS

SYSTEM HOST

MALAGA COUNTY WATER DISTRICT — SERVING HOME AND INDUSTRY

3580 S. FRANK ST
FRESNO, CA 93725
559-485-7353

SYSTEM DEVELOPER

sitelogiQ

1512 SILICA AVE
SACRAMENTO, CA 95815
916-988-8808

ELECTRICAL CONSTRUCTORS AND ENGINEERS

BLYMYER ENGINEERS

1101 MARINA VILLAGE PKWY
ALAMEDA, CA 94501
510-521-3773

STRUCTURAL ENGINEERING AND STEEL CONSTRUCT

TEICHERT SOLAR

10620 TREENA STREET, STE 140
SAN DIEGO, CA 92131
562-283-2970

ARCHITECT OF RECORD

M M **P V** d e s i g n

Mariana Moncada, Architect
718 West Arbor Drive
San Diego, CA 92103
619.632.2883

ARCHITECT / ENGINEER OF RECORD

PROJECT

MALAGA COMMUNITY PARK & RECREATION CENTER

3582 S WINERY AVE
FRESNO, CA 93725

NO.	REVISION	DATE

DATE: 07.14.23

SHEET TITLE

THREE LINE DIAGRAM

SHEET NO.:

E-2.1

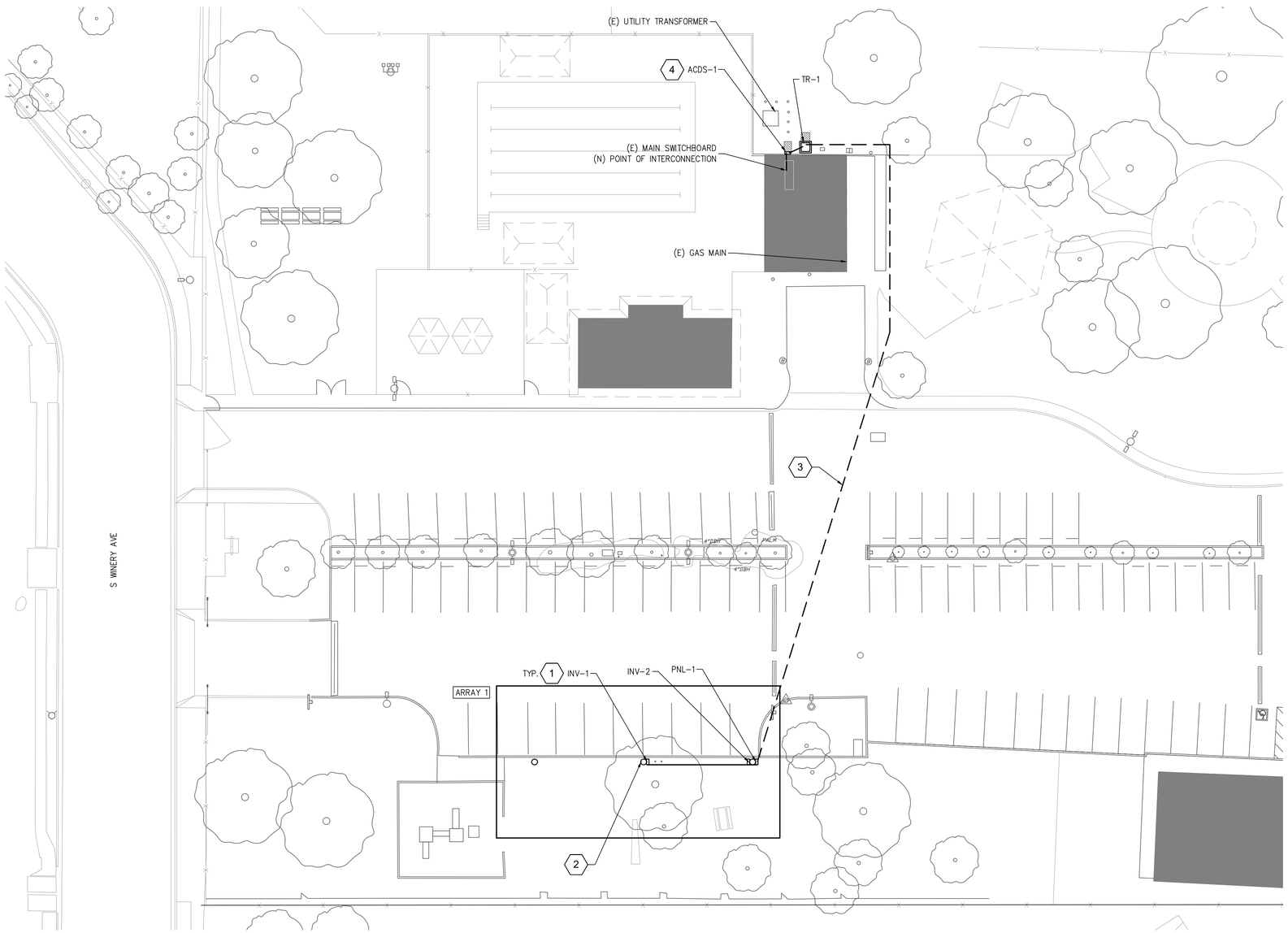

1 E-3.0 ELECTRICAL SITE PLAN

SCALE: 1" = 20'-0"

0 20' 40'

1" = 20'-0"

N

GENERAL NOTES

1. INSTALLATION SHALL BE IN ACCORDANCE WITH THE LATEST ADOPTED NEC AND NESC CODES AND STANDARDS AND SHALL CONFORM WITH INDUSTRY BEST PRACTICES AND IEEE RECOMMENDATIONS. THE AHJ HAS FINAL JURISDICTIONAL AUTHORITY ON CODE APPLICATION AND COMPLIANCE.
2. ALL EQUIPMENT SHALL BE APPROVED BY OWNER.
3. ALL INVERTER WIRING AND GROUNDING METHODS SHALL CONFORM TO THE MANUFACTURER'S RECOMMENDED PRACTICES.
4. INSTALL PULL ROPES IN EMPTY CONDUITS. USE MONOFILIMENT PLASTIC LINE WITH NOT LESS THAN 200LB TENSILE STRENGTH. LEAVE AT LEAST 12" OF SLACK AT EACH END OF THE PULL WIRE.
5. WIRE SHALL BE INSTALLED IN APPROVED RACEWAYS FOR ITS' INTENDED USE. ADEQUATELY STRAP AND SUPPORT ALL RACEWAYS. IN GENERAL, SUPPORT ALL CONDUIT WITHIN THREE (3) FEET OF OUTLET BOX, PANEL, OR ENCLOSURE, AND MAXIMUM TEN (10) FEET THEREAFTER. LFMC AND MC-PVC JACKETED CABLE WITHIN (1) FEET AND (4.5) FEET ADEQUATELY. RACEWAYS TO BE LISTED FOR WET LOCATIONS.
6. ALL EQUIPMENT SHALL BE LOCKABLE OR GUARDED AGAINST ACCESS BY UNQUALIFIED PERSONS.
7. NO CABLE TRAYS SHALL BE INSTALLED
8. EXPOSED NON-CURRENT CARRYING METAL PARTS OF ALL EQUIPMENT AND ENCLOSURES SHALL BE GROUNDED IN ACCORDANCE WITH NEC 250.134 AND 250.136. GROUND INVERTER IN ACCORDANCE WITH LISTING.
9. NO PART OF THIS DRAWING OR SPECIFICATIONS IS INTENDED TO ALLOW A VIOLATION OF PHYSICAL WORKING SPACE REQUIREMENTS AROUND ELECTRICAL EQUIPMENT AS REQUIRED BY NEC 110.26
10. ALL EQUIPMENT SHALL HAVE ARC FLASH WARNING LABELS WITH APPLICABLE INCIDENT ENERGY LEVELS, WORKING DISTANCES, AND REQUIRED PPE IN ACCORDANCE WITH NFPA 70E.
11. CONDUIT ROUTING IS DIAGRAMMATIC IN NATURE. EXACT ROUTING SHALL BE COORDINATED BY THE CONTRACTOR. CONTRACTOR IS RESPONSIBLE FOR LOCATING ALL UNDERGROUND INTERFERENCES AND AVOIDING AS NECESSARY.
12. REFER TO SHEET(S) E-2.X FOR CONDUIT AND FEEDER SPECIFICATIONS
    REFER TO SHEET(S) E-7.X FOR ELECTRICAL DETAILS
    REFER TO SHEET(S) E-9.X FOR EQUIPMENT LABELING
13. PV MODULES ARE NOT SHOWN FOR CLARITY. REFER TO ELECTRICAL ARRANGEMENT SHEETS FOR WIRING DETAILS
14. PULL-BOX TRAFFIC RATINGS SHALL BE DETERMINED IN FIELD BY CONTRACTOR, AS APPLICABLE PER LOCATION

KEYED NOTES:

1. INVERTERS TO BE INSTALLED ON THE COLUMN ON CANOPY STRUCTURE AT THE MAX HEIGHT, TO LIMIT ACCESS TO UNAUTHORIZED PERSONNEL. MIN 8'-0" MOUNTING HEIGHT IS RECOMMENDED, OTHERWISE PROTECTING GUARD SHALL BE INSTALLED OVER INVERTER DISCONNECTING MEANS. SEE SHEET **1/E-7.1** AND INSTALLATION MANUAL FOR EXACT DIMENSIONS OF ACCESS, AND MOUNTING DETAILS.
2. INSTALL CONCRETE-ENCASED ELECTRODE IN ACCORDANCE WITH NEC 250.52(A)(3)(2) CONSISTING OF #4 AWG BARE COPPER AT LEAST 20 FEET LONG, OR INSTALL ONE OR MORE GROUND RODS, MIN TOTAL LENGTH 20 FEET IN ACCORDANCE WITH NEC 250.52(A)(3)(1); MIN ONE PER EACH SEPARATE CANOPY STRUCTURE AT THE CENTER COLUMN. REFERENCE DETAIL 5/E-7.0. ALL GND CONNECTIONS SHALL BE MADE USING UL LISTED IRREVERSIBLE COMPRESSION CONNECTOR OR EXOTHERMIC WELD PROCESS AS APPLICABLE; MECHANICAL GND CONNECTORS CAN BE APPROVED FOR AN ABOVEGROUND CONNECTIONS
    CONTRACTOR TO VERIFY ELECTRODE RESISTANCE TO THE GROUND BY 3-POINT TESTING METHOD. THIS RESISTANCE SHALL NOT EXCEED 5Ω.
    SUPPLEMENTARY ELECTRODES FOR ARRAY GROUNDING SHALL BE INSTALLED IN ACCORDANCE WITH NEC 250.54, 250.52 AND 690.47.
3. INSTALL (1) 1"C COMMUNICATION CONDUIT BETWEEN CANOPIES UP TO THE **"DAS ENCLOSURE"**.
4. CONTRACTOR SHALL INSTALL UTILITY AC DISCONNECT WITHIN 10 FEET AND LINE OF SIGHT OF (E) UTILITY METER WHERE PRACTICABLE. ALTERNATIVE LOCATIONS MUST BE PROPOSED TO THE ENGINEER OF RECORD, AND WRITTEN UTILITY APPROVAL MUST BE OBTAINED PRIOR TO INSTALLATION OF THE DISCONNECT.

LEGEND

- - - - - UNDERGROUND FEEDER

——— ABOVE GROUND FEEDER

SYSTEM HOST

MALAGA COUNTY WATER DISTRICT — SERVING HOME AND INDUSTRY

3580 S. FRANK ST
FRESNO, CA 93725
559-485-7353

SYSTEM DEVELOPER

sitelogiQ

1512 SILICA AVE
SACRAMENTO, CA 95815
916-988-8808

ELECTRICAL CONSTRUCTORS AND ENGINEERS

BLYMYER ENGINEERS

1101 MARINA VILLAGE PKWY
ALAMEDA, CA 94501
510-521-3773

STRUCTURAL ENGINEERING AND STEEL CONSTRUCT

TEICHERT SOLAR

10620 TREENA STREET, STE 140
SAN DIEGO, CA 92131
562-283-2970

ARCHITECT OF RECORD

M M P V d e s i g n

Mariana Moncada, Architect
718 West Arbor Drive
San Diego, CA 92103
619.632.2883

ARCHITECT / ENGINEER OF RECORD

PROJECT

MALAGA COMMUNITY PARK & RECREATION CENTER

3582 S WINERY AVE
FRESNO, CA 93725

NO.	REVISION	DATE

DATE: 07.14.23

SHEET TITLE

ELECTRICAL SITE PLAN

SHEET NO.:

E-3.0

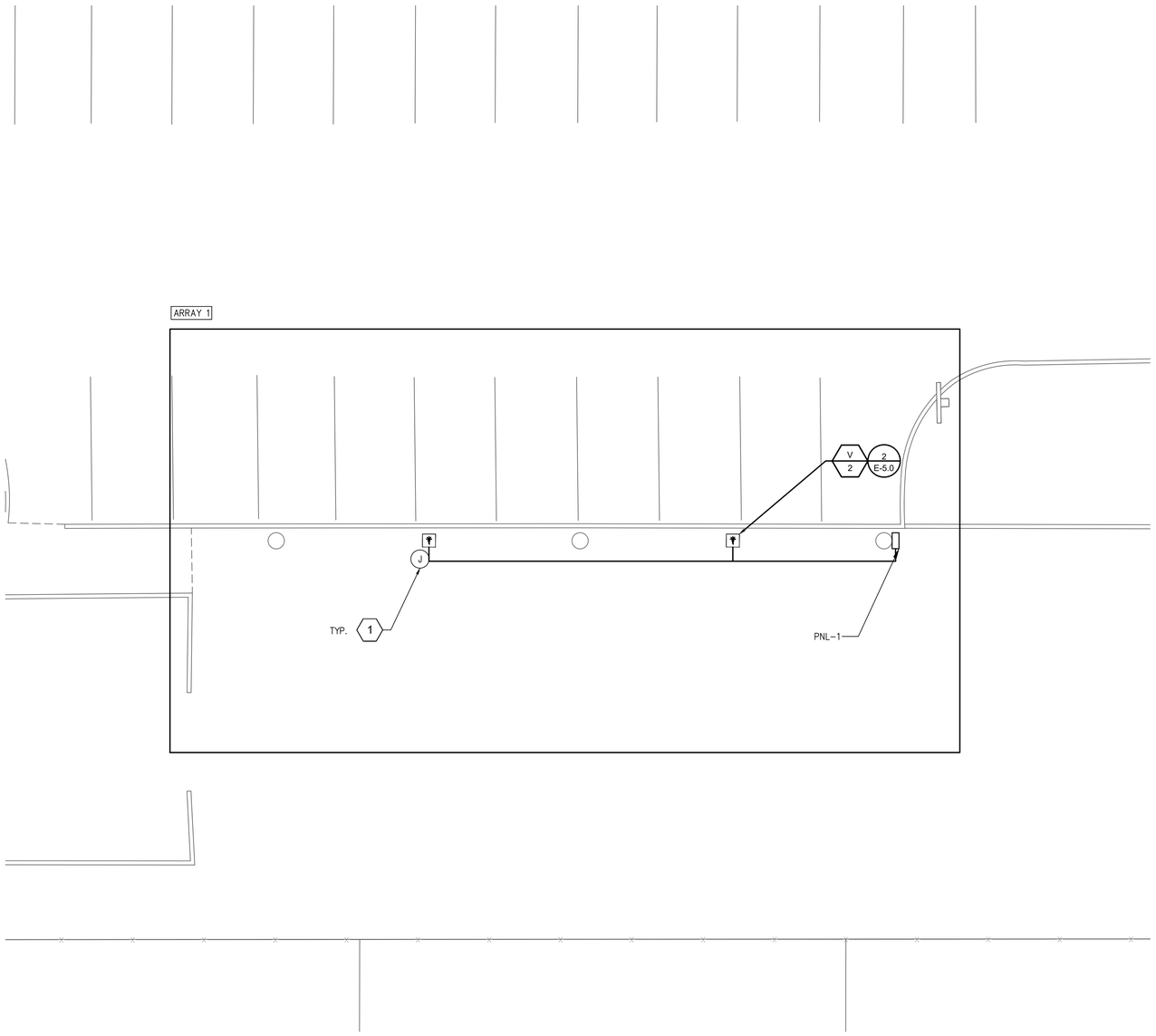

1 E-5.0 LIGHTING SITE PLAN

SCALE: 1/8" = 1'-0"

0 2' 4' 8' 16'

1/8" = 1'-0"

GENERAL NOTES

1. 1 FOOT-CANDLE MINIMUM FOR GENERAL PARKING AREA UNDER CANOPY.
2. COLOR TEMPERATURE UNDER CANOPY LIGHTING SHALL NOT BE GREATER THAN 4100K
3. LIGHTING FIXTURES TO BE MOUNTED LESS THAN 24FT ABOVE THE GROUND AND TO BE CONTROLLED BY "PARTIAL-OFF" MOTION SENSORS. THIS SENSOR SHALL BE CAPABLE OF REDUCING LIGHTING POWER BY 50-90% IF AREA WILL BE VACATED OF OCCUPANTS, NO LONGER THAN 15 MINUTES AFTER THE AREA HAS VACATED.
4. CANOPY LIGHTING CIRCUITS TO CONNECT TO (E) LIGHTING SYSTEM, OR PROVIDE NEW 20A LIGHTING CIRCUITS. TYPICAL LIGHTING SYSTEM SHALL CONTAIN PROGRAMMABLE ASTRONOMICAL TIME CLOCK OR PHOTOCELL AND "PARTIAL-OFF" OCCUPANT SENSOR. MAXIMUM LIGHTING LOAD ON ONE (1) CIRCUIT SHALL NOT EXCEED 80% OF RATING EQUIPMENT TERMINAL.
5. INSTALLER TO VERIFY EXISTING CONDITIONS, CONNECTION POINTS, AND EXISTING SYSTEM OPERATING VOLTAGE FOR LIGHTING FIXTURE AND CLOCK SELECTION, ENGINEER SHALL BE NOTIFIED.

KEYED NOTES:

1. PROVIDE J-BOX IN VARIOUS LOCATIONS AS REQUIRED TO DISTRIBUTE POWER TO LIGHTING FIXTURES. ANY LIGHTING BRANCH CIRCUIT SHALL BE MINIMUM 2#10AWG AND 1#10GND OR ANOTHER WIRE SIZE INSIDE A 3/4" CONDUIT TO MAINTAIN A 3% MAXIMUM VOLTAGE DROP AT THE FARTHEST LIGHTING FIXTURE. WIRING SHALL BE INSTALLED IN METAL RACEWAYS LISTED FOR WET LOCATION. TYPE MC OR MI CABLE LISTED FOR WET LOCATION IS PERMITTED AND SHALL BE INSTALLED IN COMPLIANCE WITH NEC 330, 332 AND PROTECTED AGAINST PHYSICAL DAMAGE. BENDS IN TYPE MC OR MI CABLE SHALL BE MADE SO THAT THE CABLE WILL NOT BE DAMAGED.

LEGEND

- AC FEEDER, UNDER GROUND
- AC FEEDER, ABOVE GROUND
- ARRAY STRUCTURE OUTLINE
- LIGHT FIXTURE
- V / # – LIGHT FIXTURE TYPE – QUANTITY
- J – J-BOX

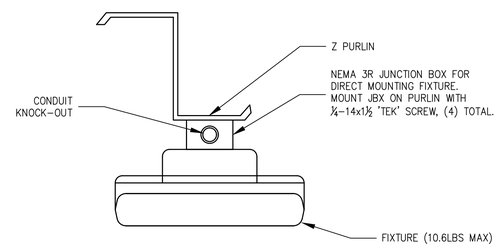

2 E-5.0 LIGHTING FIXTURE INSTALLATION

NTS

TYPE	FIXTURES	VOLTAGE	DESCRIPTION	MANUFACTURER
V	2 LED	120-277V	LED CANOPY LUMINARIES, CONSTRUCTED OF DIE CAST ALUMINUM AND SHEETMETAL HOUSING WITH WHITE FINISH. LENSE: HIGH-TRANSMISSION AND VANDAL-RESISTANT POLYCARBONATE FROSTED LENS. UL LISTING: WET LOCATION COLOR TEMP: 4000K DRIVER INCLUDES DIMMING CONTROL WIRING FOR 0-10V DIMMING SYSTEMS. REQUIRES SEPARATE 0-10V DC DIMMING CIRCUITS. DIMS AS LOW AS 10% INTEGRATED MOTION/PHOTO SENSOR OPTION PROVIDES T24-COMPLIANT MULTI-LEVEL LIGHTING CONTROLS.	PRT42N/D10/WS SYSTEM+DRIVER: 42WATTS WEIGHT: 10.6 LBS

SYSTEM HOST

MALAGA COUNTY WATER DISTRICT – SERVING HOME AND INDUSTRY

3580 S. FRANK ST
FRESNO, CA 93725
559-485-7353

SYSTEM DEVELOPER

sitelogiQ

1512 SILICA AVE
SACRAMENTO, CA 95815
916-988-8808

ELECTRICAL CONSTRUCTORS AND ENGINEERS

BLYMYER ENGINEERS

1101 MARINA VILLAGE PKWY
ALAMEDA, CA 94501
510-521-3773

STRUCTURAL ENGINEERING AND STEEL CONSTRUCT

TEICHERT SOLAR

10620 TREENA STREET, STE 140
SAN DIEGO, CA 92131
562-283-2970

ARCHITECT OF RECORD

M M P V d e s i g n

Mariana Moncada, Architect
718 West Arbor Drive
San Diego, CA 92103
619.632.2883

ARCHITECT / ENGINEER OF RECORD

PROJECT

MALAGA COMMUNITY PARK & RECREATION CENTER

3582 S WINERY AVE
FRESNO, CA 93725

NO.	REVISION	DATE

DATE: 07.14.23

SHEET TITLE

LIGHTING SITE PLAN

SHEET NO.:

E-5.0

GENERAL NOTES

1 CONTRACTOR TO UTILIZE EXISTING PARKING LOT LIGHTING CIRCUITS AND EQUIPMENT, AS LONG AS IT IS IN COMPLIANCE WITH TITLE 24 REQUIREMENTS. NEW EQUIPMENT SHALL BE PROCURED AND INSTALLED AS NEEDED TO POWER NEW LIGHTING AND COMPLY WITH TITLE 24

KEYED NOTES:

1 (N) PANELBOARD "PNL-1" (480/277 3PH, 4W), SUPPLYING POWER TO (N) LIGHT FIXTURES AT CANOPY ARRAY.

2 (N) JUNCTION BOX TO BE INSTALLED AS NEEDED THROUGHOUT CANOPY, TO ALLOW FOR BRANCHING OF (N) CANOPY LIGHTING CIRCUIT.

3 (N) CANOPY MOUNTED LIGHT FIXTURE (SEE E-5.0)

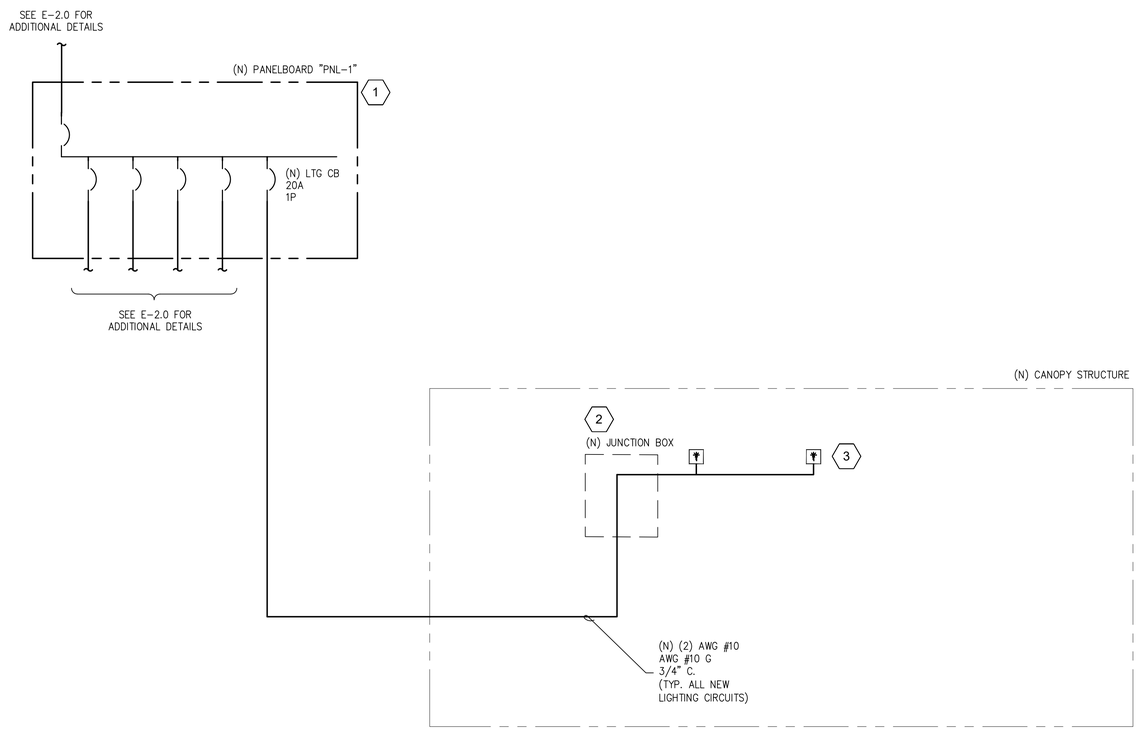

1 / E-5.1 LIGHTING LINE DIAGRAM
SCALE: 1/8" = 1'-0"

SYSTEM HOST

MALAGA COUNTY WATER DISTRICT
SERVING HOME AND INDUSTRY

3580 S. FRANK ST
FRESNO, CA 93725
559-485-7353

SYSTEM DEVELOPER

sitelogiQ

1512 SILICA AVE
SACRAMENTO, CA 95815
916-988-8808

ELECTRICAL CONSTRUCTORS AND ENGINEERS

BLYMYER ENGINEERS

1101 MARINA VILLAGE PKWY
ALAMEDA, CA 94501
510-521-3773

STRUCTURAL ENGINEERING AND STEEL CONSTRUCT

TEICHERT SOLAR

10620 TREENA STREET, STE 140
SAN DIEGO, CA 92131
562-283-2970

ARCHITECT OF RECORD

M M P V d e s i g n

Mariana Moncada, Architect
718 West Arbor Drive
San Diego, CA 92103
619.632.2883

ARCHITECT / ENGINEER OF RECORD

PROJECT

MALAGA COMMUNITY PARK & RECREATION CENTER

3582 S WINERY AVE
FRESNO, CA 93725

NO.	REVISION	DATE

DATE: 07.14.23

SHEET TITLE

LIGHTING LINE DIAGRAM

SHEET NO.:

E-5.1

STATE OF CALIFORNIA

Outdoor Lighting

CALIFORNIA ENERGY COMMISSION

CERTIFICATE OF COMPLIANCE — **NRCC-LTO-E**

This document is used to demonstrate compliance with requirements in 110.9, 130.0, 130.2, 140.7, and 141.0(b)2L for outdoor lighting scopes using the prescriptive path for nonresidential and hotel/motel occupancies. It is also used to document compliance with requirements in 160.5, 170.2(e)6, 180.1(a) and 180.2(b)4Bv for outdoor lighting scopes using the prescriptive path for multifamily and mixed-use occupancies. Multifamily includes dormitory and senior living facilities.

Project Name:	Malaga Community Park & Recreation Center	**Report Page:**	**(Page 1 of 7)**
Project Address:	3582 S WINERY AVE, FRESNO, CA 93725	**Date Prepared:**	2023-07-15T00:52:55-04:00

A. GENERAL INFORMATION

01	Project Location (city)	Malaga	04	Total Illuminated Hardscape Area (ft²)	5097
02	Climate Zone	13			
03	Outdoor Lighting Zone per Title 24 Part 1 10.114 or as designated by Authority Having Jurisdiction (AHJ):				
☐	LZ-0: Very Low - Undeveloped Parkland	☐ LZ-2: Moderate - Urban Clusters	☐ LZ-4: High - Must be reviewed by CA Energy Commission for Approval		
☐	LZ-1: Low - Rural Areas	☒ LZ-3: Moderately High - Urban Areas			
05	Occupancy Types within Project				
● Support Areas					

B. PROJECT SCOPE

This table includes outdoor lighting systems that are within the scope of the permit application and are demonstrating compliance using the prescriptive path outlined in 140.7 / 170.2(e)6 or 141.0(b)2L / 180.2(b)4Bv for alterations.

My Project Consists of:

01	02	
☒ New Lighting System	Must Comply with Allowances from 140.7 / 170.2(e)6	
☐ Altered Lighting System	Is your alteration increasing the connected lighting load (Watts)? ○ Yes ○ No	
03	04	05
% of Existing Luminaires Being Altered[1]	Sum Total of Luminaires Being Added or Altered	Calculation Method
☐ < 10% ☐ >= 10% and < 50% ☐ >= 50%		

Please proceed to Table F. Outdoor Lighting Fixture Schedule to define the project's luminaires.

[1] FOOTNOTES: % of Existing Luminaires Being Altered = (Sum Total of Luminaires Being Added or Altered / Existing Luminaires within the Scope of the Permit Application) x 100.

STATE OF CALIFORNIA

Outdoor Lighting

CALIFORNIA ENERGY COMMISSION

CERTIFICATE OF COMPLIANCE — **NRCC-LTO-E**

Project Name:	Malaga Community Park & Recreation Center	**Report Page:**	**(Page 2 of 7)**
		Date Prepared:	2023-07-15T00:52:55-04:00

C. COMPLIANCE RESULTS

Results in this table are automatically calculated from data input and calculations in Tables F through N. Note: If any cell on this table says "COMPLIES with Exceptional Conditions" refer to Table D. Exceptional Conditions for guidance or see applicable Table referenced below.

Calculations of Total Allowed Lighting Power (Watts) 140.7 / 170.2(e)6 or 141.0(b)2L / 180.2(b)4Bv												Compliance Results			
01		02		03		04		05		06		07		08	09
General Hardscape Allowance 140.7(d)1 / 170.2(e)6 (See Table I)	+	Per Application 140.7(d)2 / 170.2(e)6 (See Table J)	+	Sales Frontage 140.7(d)2 (See Table K)	+	Ornamental 140.7(d)2 / 170.2(e)6 (See Table L)	+	Per Specific Area 140.7(d)2 / 170.2(e)6 (See Table M)	OR	Existing Power Allowance 141.0(b)2L / 180.2(b)4Bv (See Table N)	=	**Total Allowed** (Watts)	≥	**Total Actual** (Watts)	**07 must be >= 08**
417.04	+	---	+	---	+	---	+	---	OR	---	=	417.04	≥	84	COMPLIES
Shielding Compliance (See Table G for Details)												N/A			
Controls Compliance (See Table H for Details)												COMPLIES			

D. EXCEPTIONAL CONDITIONS

This table is auto-filled with uneditable comments because of selections made or data entered in tables throughout the form.

E. ADDITIONAL REMARKS

This table includes remarks made by the permit applicant to the Authority Having Jurisdiction.

STATE OF CALIFORNIA

Outdoor Lighting

CALIFORNIA ENERGY COMMISSION

CERTIFICATE OF COMPLIANCE — **NRCC-LTO-E**

Project Name:	Malaga Community Park & Recreation Center	**Report Page:**	**(Page 3 of 7)**
		Date Prepared:	2023-07-15T00:52:55-04:00

F. OUTDOOR LIGHTING FIXTURE SCHEDULE

For new or altered lighting systems demonstrating compliance with 140.7 / 170.2(e)6 all new luminaires being installed and any existing luminaires remaining or being moved within the spaces covered by the permit application are included in the Table below. For altered lighting systems using the Existing Power method per 141.0(b)2L only new luminaires being installed and replacement luminaires being installed as part of the project scope are included (ie, existing luminaires remaining or existing luminaires being moved are not included). Outdoor lighting attached to multifamily buildings and controlled from the inside of a dwelling unit are included in Table H. and are not included here. All other multifamily outdoor lighting is included here.

Designed Wattage:

01	02		03	04	05	06	07	08	09	10	
Name or Item Tag	Complete Luminaire Description		Watts per luminaire[1, 2]	How is Wattage determined	Total Number Luminaires[2]	Luminaire Status[3]	Excluded per 140.7(a) / 170.2(e)6A	Design Watts	Cutoff Req. > 6,200 initial lumen output 130.2(b) / 160.5(c)1[4]	Field Inspector	
										Pass	Fail
V	RAB	☐ Linear	42	Mfr. Spec	2	New	☐	84	NA: < 6200 lumens	☐	☐
							Total Design Watts:	84			

* NOTES: Selections with a * require a note in the space below explaining how compliance is achieved.
EX: Luminaire is lighting a statue; EXCEPTION 2 to 130.2(b)

[1] FOOTNOTES: Authority Having Jurisdiction may ask for Luminaire cut sheets to confirm wattage used for compliance per 130.0(c) / 160.5(b)

[2] For linear luminaires, wattage should be indicated as W/ft instead of Watts/luminaire. Total linear feet should be indicated in column 05 instead of number of luminaires.

[3] Select "New" for new luminaires in a new outdoor lighting project, or for added luminaires in an alteration. Select "Altered" for replacement luminaires in an alteration. Select "Existing to Remain" for existing luminaires within the project scope that are not being altered and are remaining. Select "Existing Reinstalled" for existing luminaires which are being removed and reinstalled as part of the project scope.

[4] Compliance with mandatory shielding requirements is required for luminaires with initial lumen output >= 6,200 unless exempted by 130.2(b)/ 160.5(c)

G. SHIELDING REQUIREMENTS (BUG)

This section does not apply to this project.

STATE OF CALIFORNIA

Outdoor Lighting

CALIFORNIA ENERGY COMMISSION

CERTIFICATE OF COMPLIANCE — **NRCC-LTO-E**

Project Name:	Malaga Community Park & Recreation Center	**Report Page:**	**(Page 4 of 7)**
		Date Prepared:	2023-07-15T00:52:55-04:00

H. OUTDOOR LIGHTING CONTROLS

This table demonstrates compliance with controls requirements for all new or altered luminaires installed as part of the permit application. For alteration projects, luminaires which are existing to remain (ie untouched) and luminaires which are removed and reinstalled (wiring only) do not need to be included in this table even if they are within the spaces covered by the permit application.
Outdoor lighting for nonresidential buildings, parking garages and common service areas in multifamily buildings must be documented separately from outdoor lighting attached to multifamily buildings and controlled from the inside of a dwelling unit

Mandatory Controls for Nonresidential Occupancies, Parking Garages & Common Areas in Multifamily Buildings

01	02	03	04	05	
Area Description	Shut-Off 130.2(c)1 / 160.5(c)	Auto-Schedule 130.2(c)2 / 160.5(c)	Motion Sensor 130.2(c)3 / 160.5(c)	Field Inspector	
				Pass	Fail
SOLAR CANOPY: "V"	Photocontrol	Provided	Provided	☐	☐

[1] FOOTNOTE: Text has been abbreviated, please refer to Table 160.5-A to confirm compliance with the specific light source technologies listed.

[2] Authority having jurisdiction may ask for cutsheets or other documentation to confirm compliance of light source.

[3] Recessed luminaires marked for use in fire-rated installations, and recessed luminaires installed in non-insulated ceilings are excepted from ii and iii.

SYSTEM HOST

MALAGA COUNTY WATER DISTRICT — SERVING HOME AND INDUSTRY

3580 S. FRANK ST
FRESNO, CA 93725
559-485-7353

SYSTEM DEVELOPER

sitelogiQ

1512 SILICA AVE
SACRAMENTO, CA 95815
916-988-8808

ELECTRICAL CONSTRUCTORS AND ENGINEERS

BLYMYER ENGINEERS

1101 MARINA VILLAGE PKWY
ALAMEDA, CA 94501
510-521-3773

STRUCTURAL ENGINEERING AND STEEL CONSTRUCT

TEICHERT SOLAR

10620 TREENA STREET, STE 140
SAN DIEGO, CA 92131
562-283-2970

ARCHITECT OF RECORD

M M P V d e s i g n

Mariana Moncada, Architect
718 West Arbor Drive
San Diego, CA 92103
619.632.2883

ARCHITECT / ENGINEER OF RECORD

PROJECT

MALAGA COMMUNITY PARK & RECREATION CENTER

3582 S WINERY AVE
FRESNO, CA 93725

NO.	REVISION	DATE

DATE: 07.14.23

SHEET TITLE

TITLE 24 COMPLIANCE

SHEET NO.:

E-5.2

STATE OF CALIFORNIA

Outdoor Lighting

CALIFORNIA ENERGY COMMISSION

CERTIFICATE OF COMPLIANCE		NRCC-LTO-E
Project Name: Malaga Community Park & Recreation Center	**Report Page:**	**(Page 5 of 7)**
	Date Prepared:	2023-07-15T00:52:55-04:00

I. LIGHTING POWER ALLOWANCE (per 140.7 / 170.2(e))

This table includes areas using allowance calculations per 140.7 / 170.2(e). General Hardscape Allowance is per Table 140.7-A/Table 170.2-R while "Use it or lose it" Allowances are per Table 140.7-B /Table 170.2-S. Indicate which allowances are being used to expand sections for user input. Luminaires that qualify for one of the "Use it or lose it" allowances shall not qualify for another "Use it or lose it" allowance. Outdoor lighting attached to multifamily buildings and controlled from the inside of a dwelling unit are included in Table H. and are not included here. All other multifamily outdoor lighting is included here.

01				
	"Use it or lose it" Allowance (select all that apply) (select all that apply)			
☒ General Hardscape Allowance Table I (below)	☐ Per Application Table J	☐ Sales Frontage Table K	☐ Ornamental Table L	☐ Per Specific Area Table M

Calculated General Hardscape Lighting Power Allowance per Table 140.7-A for Nonresidential & Hotel/Motel

02	03	04	05	06	07	08	09
Area Description	Area Wattage Allowance (AWA)			Linear Wattage Allowance (LWA)			Total General AWA + LWA (Watts)
	Illuminated Area (ft^2)	Allowed Density (W/ft^2)	Area Allowance (Watts)	Perimeter Length (lf)	Allowed Density (W/lf)	Linear Allowance (Watts)	
SOLAR CANOPY	5097	0.021	107.04	300	0.2	60	167.04
Initial Wattage Allowance for Entire Site (Watts):							250
Instances of Initial Wattage Allowance (LZ 0 only)[1]							
Total General Hardscape Allowance (Watts):							417.04

J. LIGHTING ALLOWANCE: PER APPLICATION

This section does not apply to this project.

K. LIGHTING ALLOWANCE: SALES FRONTAGE

This section does not apply to this project.

L. LIGHTING ALLOWANCE: ORNAMENTAL

This section does not apply to this project.

STATE OF CALIFORNIA

Outdoor Lighting

CALIFORNIA ENERGY COMMISSION

CERTIFICATE OF COMPLIANCE		NRCC-LTO-E
Project Name: Malaga Community Park & Recreation Center	**Report Page:**	**(Page 6 of 7)**
	Date Prepared:	2023-07-15T00:52:55-04:00

M. LIGHTING ALLOWANCE: PER SPECIFIC AREA

This section does not apply to this project.

N. EXISTING CONDITIONS POWER ALLOWANCE (alterations only)

This section does not apply to this project.

O. DECLARATION OF REQUIRED CERTIFICATES OF INSTALLATION

Selections have been made based on information provided in this document. If any selection has been changed by permit applicant, an explanation should be included in Table E. Additional Remarks. These documents must be provided to the building inspector during construction and can be found online

Form/Title
NRCI-LTO-E - Must be submitted for all buildings

P. DECLARATION OF REQUIRED CERTIFICATES OF ACCEPTANCE

Selections have been made based on information provided in this document. If any selection has been changed by permit applicant, an explanation should be included in Table E. Additional Remarks. These documents must be provided to the building inspector during construction and must be completed through an Acceptance Test Technician Certification Provider (ATTCP). For more information visit: http://www.energy.ca.gov/title24/attcp/providers.html

Form/Title	Systems/Spaces To Be Field Verified
NRCA-LTO-02-A - Must be submitted for all outdoor lighting controls except for alterations where controls are added to <= 20 luminaires.	SOLAR CANOPY: "V"

STATE OF CALIFORNIA

Outdoor Lighting

CALIFORNIA ENERGY COMMISSION

CERTIFICATE OF COMPLIANCE		NRCC-LTO-E
Project Name: Malaga Community Park & Recreation Center	**Report Page:**	**(Page 7 of 7)**
Project Address: 3582 S WINERY AVE, FRESNO, CA 93725	**Date Prepared:**	2023-07-15T00:52:55-04:00

DOCUMENTATION AUTHOR'S DECLARATION STATEMENT

I certify that this Certificate of Compliance documentation is accurate and complete.

Documentation Author Name: Joon Choi	Documentation Author Signature:
Company: Blymyer Engineers	Signature Date: 7/14/2023
Address: 1101 MARINA VILLAGE PKWY	CEA/ HERS Certification Identification (if applicable):
City/State/Zip: ALAMEDA, CA 94501	Phone: (510) 521-3773

RESPONSIBLE PERSON'S DECLARATION STATEMENT

I certify the following under penalty of perjury, under the laws of the State of California:

1. The information provided on this Certificate of Compliance is true and correct.
2. I am eligible under Division 3 of the Business and Professions Code to accept responsibility for the building design or system design identified on this Certificate of Compliance (responsible designer)
3. The energy features and performance specifications, materials, components, and manufactured devices for the building design or system design identified on this Certificate of Compliance conform to the requirements of Title 24, Part 1 and Part 6 of the California Code of Regulations.
4. The building design features or system design features identified on this Certificate of Compliance are consistent with the information provided on other applicable compliance documents, worksheets, calculations, plans and specifications submitted to the enforcement agency for approval with this building permit application.
5. I will ensure that a completed signed copy of this Certificate of Compliance shall be made available with the building permit(s) issued for the building, and made available to the enforcement agency for all applicable inspections. I understand that a completed signed copy of this Certificate of Compliance is required to be included with the documentation the builder provides to the building owner at occupancy.

Responsible Designer Name: Joon Choi	Responsible Designer Signature:
Company: Blymyer Engineers	Date Signed: 7/14/2023
Address: 1101 MARINA VILLAGE PKWY	License: E24039
City/State/Zip: ALAMEDA, CA 94501	Phone: (510) 521-3773

SYSTEM HOST

MALAGA COUNTY WATER DISTRICT
SERVING HOME AND INDUSTRY

3580 S. FRANK ST
FRESNO, CA 93725
559-485-7353

SYSTEM DEVELOPER

sitelogiq

1512 SILICA AVE
SACRAMENTO, CA 95815
916-988-8808

ELECTRICAL CONSTRUCTORS AND ENGINEERS

BLYMYER ENGINEERS

1101 MARINA VILLAGE PKWY
ALAMEDA, CA 94501
510-521-3773

STRUCTURAL ENGINEERING AND STEEL CONSTRUCT

TEICHERT SOLAR

10620 TREENA STREET, STE 140
SAN DIEGO, CA 92131
562-283-2970

ARCHITECT OF RECORD

M M P V d e s i g n

Mariana Moncada, Architect
718 West Arbor Drive
San Diego, CA 92103
619.632.2883

ARCHITECT / ENGINEER OF RECORD

PROJECT

MALAGA COMMUNITY PARK & RECREATION CENTER

3582 S WINERY AVE
FRESNO, CA 93725

NO.	REVISION	DATE

DATE: 07.14.23

SHEET TITLE

TITLE 24 COMPLIANCE

SHEET NO.:

E-5.3

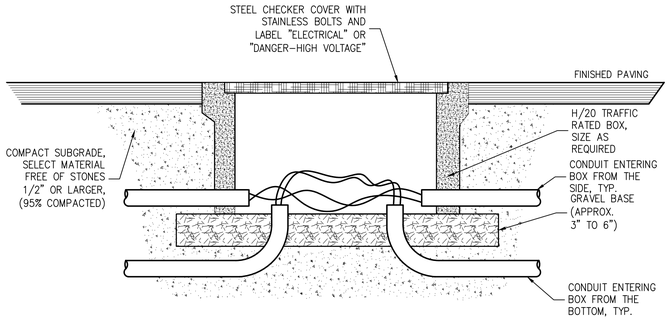

1 - TRAFFIC RATED PULLBOX

SCALE: 1/2" = 1'-0"

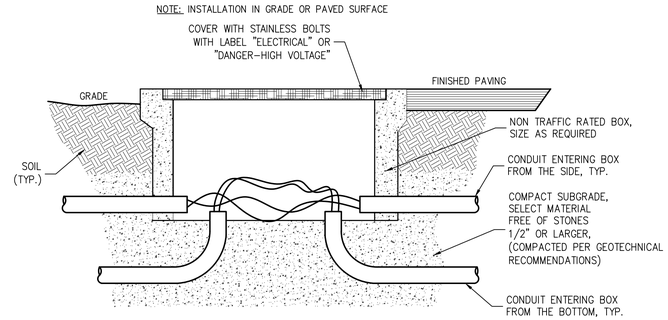

2 - NON-TRAFFIC RATED PULL BOX

SCALE: 1/2" = 1'-0"

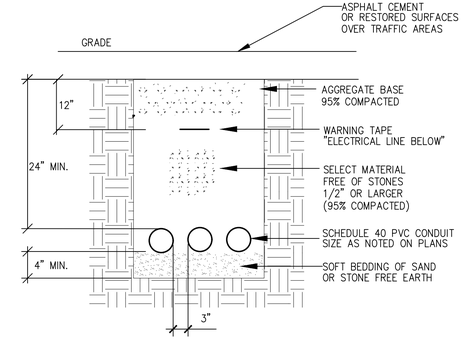

3 - LV TRENCHING DETAIL - OVER TRAFFIC

SCALE: 1/2" = 1'-0"

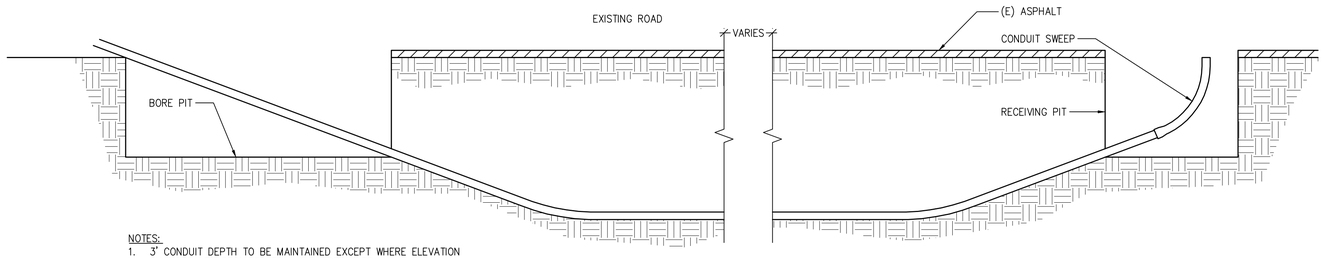

NOTES:

1. 3' CONDUIT DEPTH TO BE MAINTAINED EXCEPT WHERE ELEVATION CHANGES ARE REQUIRED TO AVOID OBSTACLES.
2. LOCATING SERVICE SHALL BE USED ALONG PROPOSED ROUTE. ALL OBSTRUCTIONS SHALL BE POTHOLED TO DETERMINE DEPTH AND LOCATION.
3. BORE AND RECEIVING PIT SHALL BE FILLED. BACKFILL SHOULD BE PLACED IN HORIZONTAL LIFTS AND COMPACTED TO 85% RELATIVE COMPACTION, AS EVALUATED BY ASTM D698. AGGREGATE BASE AND THE UPPER 12" OF SUBGRADE BENEATH PAVEMENT AREAS SHOULD BE COMPACTED TO 95% RELATIVE COMPACTION, AS EVALUATED BY ASTM D698. FINISH SURFACES SHALL MATCH EXISTING.
4. CONDUIT SWEEP TO BE INSTALLED AT ENDS AFTER BORING IS COMPLETE

4 - DIRECTIONAL BORING DETAIL

SCALE: NTS

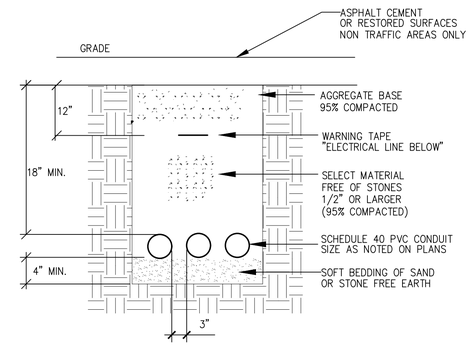

5 - LV TRENCHING DETAIL - NOT OVER TRAFFIC

SCALE: 1/2" = 1'-0"

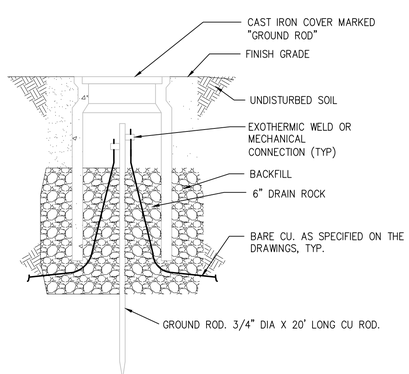

6 - GROUND ROD INSPECTION WELL

SCALE: NTS

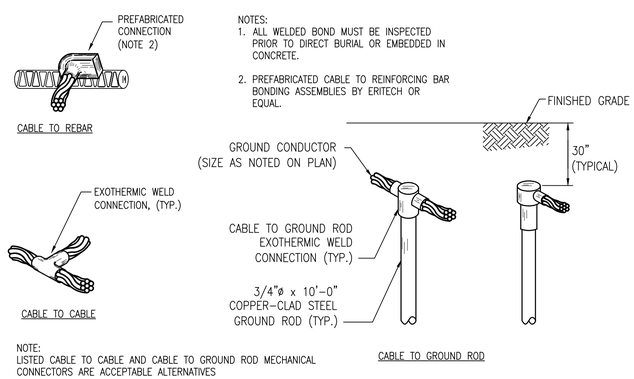

NOTES:

1. ALL WELDED BOND MUST BE INSPECTED PRIOR TO DIRECT BURIAL OR EMBEDDED IN CONCRETE.
2. PREFABRICATED CABLE TO REINFORCING BAR BONDING ASSEMBLIES BY ERITECH OR EQUAL.

NOTE:
LISTED CABLE TO CABLE AND CABLE TO GROUND ROD MECHANICAL CONNECTORS ARE ACCEPTABLE ALTERNATIVES

7 - WELDED GROUNDING CONNECTION DETAILS

SCALE: NTS

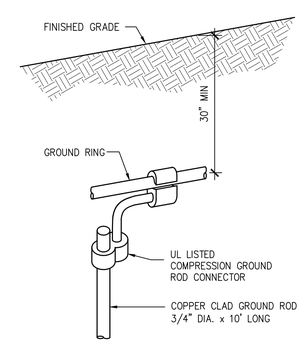

8 - BURIED GROUND ROD DETAIL (ALTERNATE)

SCALE: NTS

SYSTEM HOST

MALAGA COUNTY WATER DISTRICT
SERVING HOME AND INDUSTRY

3580 S. FRANK ST
FRESNO, CA 93725
559-485-7353

SYSTEM DEVELOPER

sitelogiQ

1512 SILICA AVE
SACRAMENTO, CA 95815
916-988-8808

ELECTRICAL CONSTRUCTORS AND ENGINEERS

BLYMYER ENGINEERS

1101 MARINA VILLAGE PKWY
ALAMEDA, CA 94501
510-521-3773

STRUCTURAL ENGINEERING AND STEEL CONSTRUCT

TEICHERT SOLAR

10620 TREENA STREET, STE 140
SAN DIEGO, CA 92131
562-283-2970

ARCHITECT OF RECORD

M M P V d e s i g n

Mariana Moncada, Architect
718 West Arbor Drive
San Diego, CA 92103
619.632.2883

ARCHITECT / ENGINEER OF RECORD

PROJECT

MALAGA COMMUNITY PARK & RECREATION CENTER

3582 S WINERY AVE
FRESNO, CA 93725

NO.	REVISION	DATE

DATE:

07.14.23

SHEET TITLE

ELECTRICAL DETAILS

SHEET NO.:

E-7.0

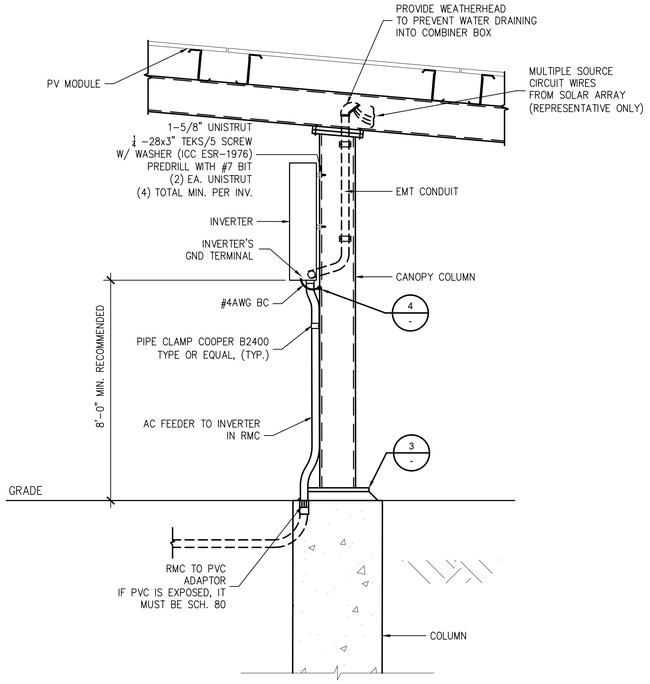

1 - INVERTER MOUNTING DETAIL

SCALE: 1/2' = 1'-0"

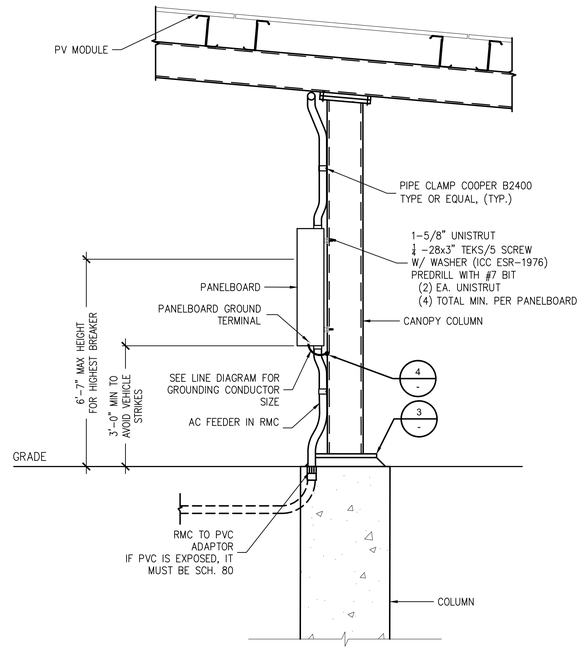

2 - PANELBOARD MOUNTING DETAIL

SCALE: 1/2' = 1'-0"

NOTE:
1. SEE E-3.0 FOR GROUNDED COLUMN LOCATIONS
2. INSTALLERS SHALL CAN USE EITHER OPTIONS TO GROUND THE CANOPY COLUMN
3. ANY GROUNDING CONDUCTOR TO CONDUCTOR CONNECTIONS MUST BE MADE WITH LISTED CABLE TO CABLE MECHANICAL CONNECTORS,

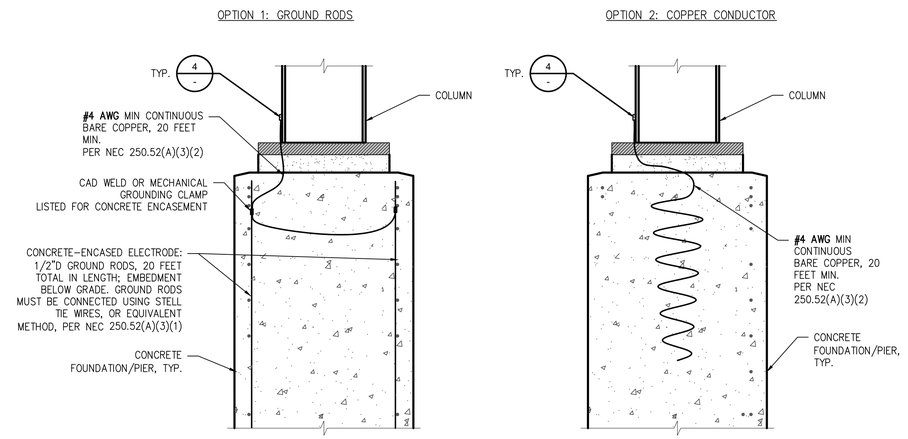

3 - TYPICAL CANOPY COLUMN GROUNDING

SCALE: NTS

NOTES:
1. INSTALLERS MAY CHOOSE ANY ONE OF THESE OPTIONS FOR CONDUCTOR TO STRUCTURE GROUNDING CONNECTIONS.
2. GROUNDING CONNECTION SHALL COMPLY WITH NEC 250.8(A).
3. WELDS SHALL BE COVERED WITH 'COLD GALVANIZING' COMPOUND.

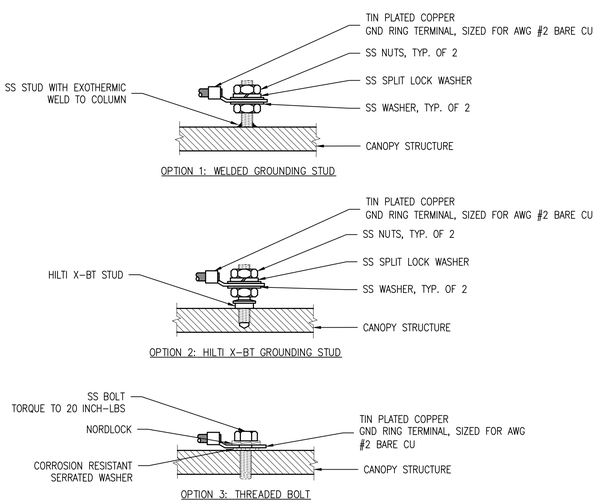

4 - TYPICAL GROUNDED CONDUCTOR TO STRUCTURE ATTACHMENT

SCALE: NTS

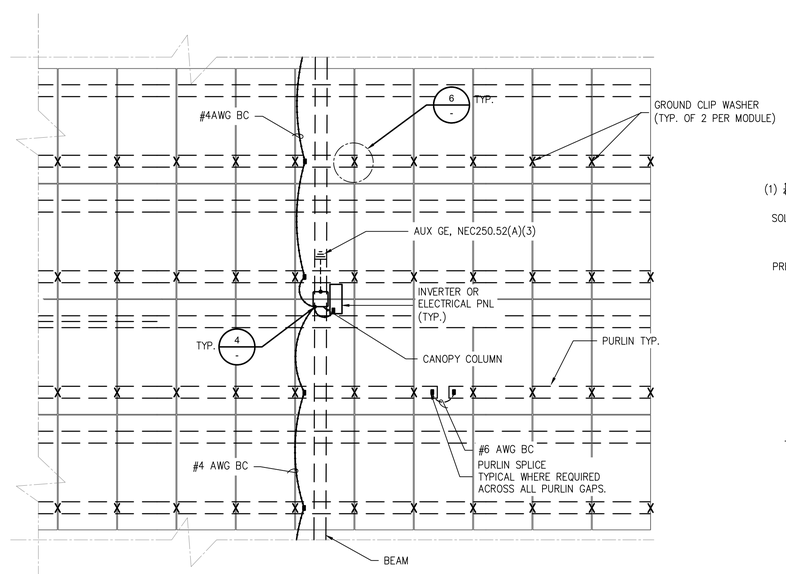

5 - TYPICAL MODULE GROUNDING PLAN

SCALE: NTS

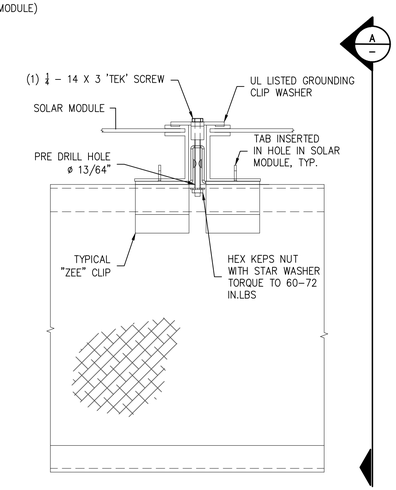

6 - TYPICAL MODULE GROUNDING DETAIL

SCALE: NTS

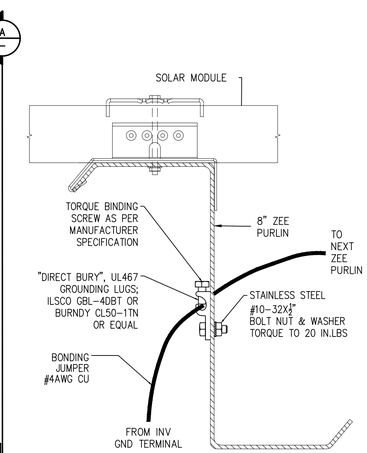

A - PURLIN SECTION A

SCALE: NTS

SYSTEM HOST

MALAGA COUNTY WATER DISTRICT
SERVING HOME AND INDUSTRY

3580 S. FRANK ST
FRESNO, CA 93725
559-485-7353

SYSTEM DEVELOPER

sitelogiq

1512 SILICA AVE
SACRAMENTO, CA 95815
916-988-8808

ELECTRICAL CONSTRUCTORS AND ENGINEERS

BLYMYER ENGINEERS

1101 MARINA VILLAGE PKWY
ALAMEDA, CA 94501
510-521-3773

STRUCTURAL ENGINEERING AND STEEL CONSTRUCT

TEICHERT SOLAR

10620 TREENA STREET, STE 140
SAN DIEGO, CA 92131
562-283-2970

ARCHITECT OF RECORD

M M P V d e s i g n

Mariana Moncada, Architect
718 West Arbor Drive
San Diego, CA 92103
619.632.2883

ARCHITECT / ENGINEER OF RECORD

PROJECT

MALAGA COMMUNITY PARK & RECREATION CENTER

3582 S WINERY AVE
FRESNO, CA 93725

NO.	REVISION	DATE

DATE: 07.14.23

SHEET TITLE

ELECTRICAL DETAILS

SHEET NO.:

E-7.1

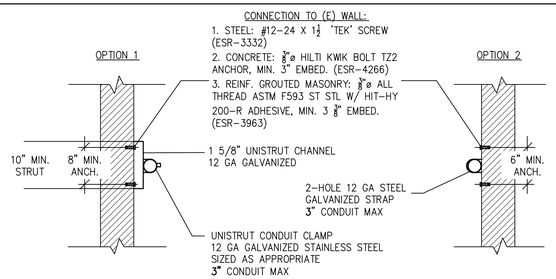

NOTES:
1. ALL CHANGES TO THE LISTED CONNECTION SPECS MUST BE SUBMITTED TO DSA VIA CCD
2. EMT, RGS, CONDUIT SHALL BE SUPPORTED WITHIN (3) FEET OF ANY ENCLOSURE, AND MAXIMUM (10) ON CENTER THEREAFTER. LFMC AND MC-PVC JACKETED CABLE WITHIN (1) FEET AND (4.5) FEET.
3. POST-INSTALLED MASONRY ANCHORS SHALL BE ASTM F593 STAINLESS STEEL ALL THREAD RODS SET IN HILTI HIT-HY 200 ADHESIVE CONFORMING TO ICC ESR 3963.
4. ANCHOR INSTALLATION SHALL BE OBSERVED BY THE PROJECT INSPECTOR OF RECORD FOR COMPLIANCE WITH THE MANUFACTURER'S INSTALLATION INSTRUCTIONS.
5. ANCHORS SHALL BE TENSION TESTED BY THE TESTING LABORATORY IN COMPLIANCE WITH CBC 1910A.5.2:
   - 5.1 TEST FREQUENCY: 10%
   - 5.2 TENSION TEST VALUES: TENSION TEST ANCHORS TO 1400 lbf.
   - 5.3 TEST ACCEPTANCE: ANCHORS SHALL MAINTAIN THE TEST LOAD FOR A MINIMUM OF 15 SECONDS AND SHALL EXHIBIT NO DISCERNIBLE MOVEMENT DURING THE TENSION TEST (E.G. LOOSENING OF THE WASHER UNDER THE NUT).
   - 5.4 IF ANY ANCHOR FAILS TESTING, ALL ANCHORS OF THE SAME TYPE, NOT PREVIOUSLY TESTED, WHICH WERE INSTALLED BY THE SAME TRADE SHALL BE TESTED UNTIL TWENTY (20) CONSECUTIVE ANCHORS PASS, THEN RESUME NORMAL FREQUENCY.

1 CONDUIT SUPPORT
SCALE: NTS

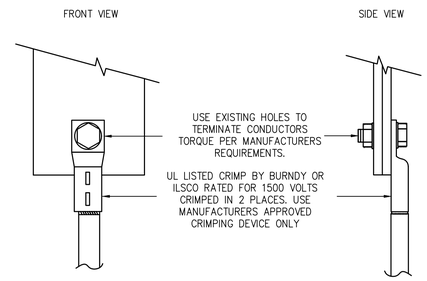

2 PANEL INTERCONNECTION
SCALE: NTS

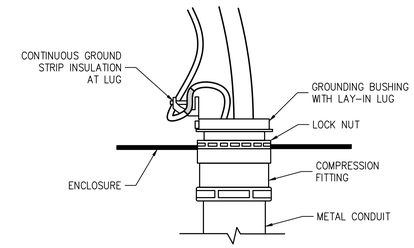

3 METAL CONDUIT GROUNDING
SCALE: NTS

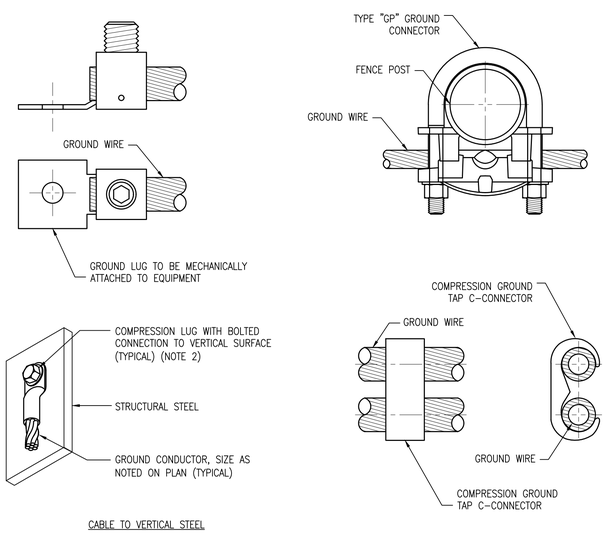

4 MECHANICAL GROUNDING CONNECTION DETAILS
SCALE: NTS

SYSTEM HOST

MALAGA COUNTY WATER DISTRICT — SERVING HOME AND INDUSTRY

3580 S. FRANK ST
FRESNO, CA 93725
559-485-7353

SYSTEM DEVELOPER

sitelogiq

1512 SILICA AVE
SACRAMENTO, CA 95815
916-988-8808

ELECTRICAL CONSTRUCTORS AND ENGINEERS

BLYMYER ENGINEERS

1101 MARINA VILLAGE PKWY
ALAMEDA, CA 94501
510-521-3773

STRUCTURAL ENGINEERING AND STEEL CONSTRUCT

TEICHERT SOLAR

10620 TREENA STREET, STE 140
SAN DIEGO, CA 92131
562-283-2970

ARCHITECT OF RECORD

M M P V d e s i g n

Mariana Moncada, Architect
718 West Arbor Drive
San Diego, CA 92103
619.632.2883

ARCHITECT / ENGINEER OF RECORD

PROJECT

MALAGA COMMUNITY PARK & RECREATION CENTER

3582 S WINERY AVE
FRESNO, CA 93725

NO.	REVISION	DATE

DATE: 07.14.23

SHEET TITLE

ELECTRICAL DETAILS

SHEET NO.:

E-7.2

4"

3"

PHOTOVOLTAIC DC DISCONNECT

WARNING!

ELECTRICAL SHOCK HAZARD. DO NOT TOUCH TERMINALS.
TERMINALS ON BOTH THE LINE AND LOAD SIDES MAY BE
ENERGIZED IN THE OPEN POSITION.

MAX. SYSTEM VOLTAGE (Voc):	(*) V
MAX. POWER VOLTAGE (Vmp):	(*) V
MAX. CIRCUIT CURRENT (Isc):	(*) A
MAX. POWER CURRENT (Imp):	(*) A

DC SYSTEM VALUES

NUMBER OF MODULES PER STRING	14	15	18
MAX. SYSTEM VOLTAGE (Voc)	739.5	792.3	950.8
MAX. POWER VOLTAGE (Vmp)	578.2	619.5	743.4
NUMBER OF STRINGS PER MPPT	1	2	2
MAX. CIRCUIT CURRENT (Isc)	15.41	30.82	30.82
MAX. POWER CURRENT (Imp)	14.38	28.78	28.78

NOTES:

1. PLACE SIGN ADJACENT TO COMBINER BOX DISCONNECT SWITCH.
2. RED BACKGROUND, WHITE LETTERING
3. TEXT: 0.16", .25", AND 0.08" HEIGHT, ALL CAPITAL LETTERS ARIAL OR SIMILAR FONT, NON-BOLD
4. MATERIAL: TEXT PRINTED ON ALUMINUM BACKING WITH UV-RATED PLASTIC LAMINATE COATING AND OUTDOOR RATED ADHESIVE.
5. MAXIMUM TOTAL CURRENT AND VOLTAGE VALUES VARY BETWEEN MPPTS. REFER TO DC SYSTEM TABLE FOR EXACT VALUES.
6. APPLICABLE NEC SECTIONS: 690.15 AND 690.53

1 - PV SYSTEM SOURCE DC DISCONNECT

SCALE: NTS

4"

2"

PHOTOVOLTAIC AC DISCONNECT

WARNING!

ELECTRICAL SHOCK HAZARD. DO NOT TOUCH TERMINALS.
TERMINALS ON BOTH THE LINE AND LOAD SIDES MAY BE
ENERGIZED IN THE OPEN POSITION.

MAX. OPERATING VOLTAGE:	480V
MAX. OPERATING CURRENT:	(*)A/ POLE

*CPS SCA36KTL-DO/US-480 - (43.5A)
*CPS SCA50KTL-DO/US-480 - (60.2A)

NOTES:

1. PLACE SIGN ON OR ADJACENT TO INVERTER AC DISCONNECT.
2. RED BACKGROUND, WHITE LETTERING
3. TEXT: 0.25", 0.16", AND 0.08" HEIGHT, ALL CAPITAL LETTERS ARIAL OR SIMILAR FONT, NON-BOLD
4. MATERIAL: TEXT PRINTED ON ALUMINUM BACKING WITH UV-RATED PLASTIC LAMINATE COATING AND OUTDOOR RATED ADHESIVE.
5. NEC 690.15

5 - PV INVERTER AC DISCONNECT

SCALE: NTS

½"

ID-XY

EQUIPMENT LABELS

EQUIPMENT NAME	ID
PANEL	PNL-1
PV INVERTER	INV-#
AC DISCONNECT	ACDS-1

2 - EQUIPMENT LABEL

SCALE: NTS

4"

2"

PHOTOVOLTAIC SYSTEM
MAIN AC DISCONNECT

WARNING!

ELECTRICAL SHOCK HAZARD. DO NOT TOUCH TERMINALS.
TERMINALS ON BOTH THE LINE AND LOAD SIDES MAY BE
ENERGIZED IN THE OPEN POSITION.

MAX. OPERATING VOLTAGE:	208V
MAX. OPERATING CURRENT:	312.3A/ POLE

4"

1"

SERVICE RATED
EQUIPMENT

NOTES:

1. PLACE SIGN ON OR ADJACENT TO UTILITY AC DISCONNECT (NEC 690.13)
2. RED BACKGROUND, WHITE LETTERING
3. TEXT: 0.25", 0.16", AND 0.08" HEIGHT, ALL CAPITAL LETTERS ARIAL OR SIMILAR FONT, NON-BOLD
4. MATERIAL: TEXT PRINTED ON ALUMINUM BACKING WITH UV-RATED PLASTIC LAMINATE COATING AND OUTDOOR RATED ADHESIVE.

6 - PV SYSTEM UTILITY AC DISCONNECT

SCALE: NTS

6"

1.5"

INVERTER OUTPUT PANEL
DO NOT ADD LOAD

NOTE:

1. INVERTER IDENTIFICATION LABEL
2. BLACK BACKGROUND
3. WHITE LETTERING
4. MATERIAL NOTE: ENGRAVED ON OUTDOOR-RATED PLASTIC LAMINATE WITH ADHESIVE BACKING SUITABLE ENVIRONMENT.
5. SHANNON OR SIMILAR FONT, NON-BOLD

3 - INVERTER PANELBOARD LABEL

SCALE: NTS

5"

1"

CAUTION: SOLAR ELECTRIC SYSTEM CONNECTED

NOTE:

1. LOCATED AT POINT OF INTERCONNECTION
2. RED BACKGROUND, WHITE LETTERING, MINIMUM 3/8" LETTER HEIGHT
3. ALL CAPITAL LETTERS
4. REFLECTIVE WEATHER RESISTANT MATERIAL SUITABLE FOR THE ENVIRONMENT. (DURABLE ADHESIVE MATERIALS MAY MEET THIS REQUIREMENT)

7 - MARKING FOR MAIN SERVICE POI

SCALE: NTS

(6½")

WARNING: PHOTOVOLTAIC POWER SOURCE

(1")

NOTES:

1. PLACE LABEL ON: EXPOSED DC CONDUIT, RACEWAYS, CABLE TRAYS, AND OTHER WIRING METHODS. COVERS OR ENCLOSURES OF PULL BOXES AND JUNCTION BOXES. SPACING BETWEEN LABELS NOT TO EXCEED 10 FT.
2. RED BACKGROUND, WHITE LETTERING
3. TEXT: MIN. 3/8" HEIGHT, ALL CAPITAL LETTERS, ARIAL OR SIMILAR FONT, NON-BOLD
4. MATERIAL: REFLECTIVE, WEATHER AND UV RESISTANT WITH DURABLE ADHESIVE SUITABLE FOR THE ENVIRONMENT.
5. NEC 690.31(B) AND (G)

4 - PV SOURCE ENCLOSURE AND RACEWAY LABEL

SCALE: NTS

3"

1"

WARNING!

DO NOT REPLACE FUSES WHILE THE
CIRCUIT IS ENERGIZED.

NOTES:

1. PLACE LABEL ADJACENT TO INVERTER AND FUSIBLE AC DISCONNECT.
2. RED BACKGROUND, WHITE LETTERING
3. TEXT: MIN. 0.25" AND 0.08" HEIGHT, ALL CAPITAL LETTERS ARIAL OR SIMILAR FONT, NON-BOLD
4. MATERIAL: REFLECTIVE, WEATHER AND UV RESISTANT WITH DURABLE ADHESIVE SUITABLE FOR THE ENVIRONMENT.

8 - FUSE WARNING SIGN

SCALE: NTS

(4")

WARNING

ARC FLASH AND SHOCK HAZARD PRESENT
APPROPRIATE PPE REQUIRED

[IN]- FLASH HAZARD BOUNDARY
[CAL/CM^2] - FLASH HAZARD AT 18"

REQUIRED PPE: ###

KVAC SHOCK HAZARD WHEN COVER REMOVED
GLOVE CLASS
[FT] LIMITED APROACH
[FT] RESTRICTED APPROACH

EQUIPMENT ID - ####

3852 S WINERY AVE
FRESNO, CA 93725

BLYMER ENGINEERS
MM/DD/YYY

(4")

(4")

DANGER

ARC FLASH AND SHOCK HAZARD PRESENT
APPROPRIATE PPE REQUIRED

[IN]- FLASH HAZARD BOUNDARY
[CAL/CM^2] - FLASH HAZARD AT 18"

REQUIRED PPE: ###

KVAC SHOCK HAZARD WHEN COVER REMOVED
GLOVE CLASS
[FT] LIMITED APROACH
[FT] RESTRICTED APPROACH

EQUIPMENT ID - ####

3852 S WINERY AVE
FRESNO, CA 93725

BLYMER ENGINEERS
MM/DD/YYY

NOTES:

1. RED BACKGROUND & WHITE LETTERING
2. TEXT HEIGHT: 3/8", 1/8" & ALL CAPITAL LETTERS
3. REFLECTIVE WEATHER RESISTANT MATERIAL SUITABLE FOR THE ENVIRONMENT.
4. MARKING FOR EACH INVERTER, PANELBOARD, SWITCHBOARD, DISCONENCT, AND POINT OF INTERCONNECTION

9 - ARC FLASH HAZARD WARNING

SCALE: NTS

SYSTEM HOST

MALAGA COUNTY WATER DISTRICT
SERVING HOME AND INDUSTRY

3580 S. FRANK ST
FRESNO, CA 93725
559-485-7353

SYSTEM DEVELOPER

sitelogiq

1512 SILICA AVE
SACRAMENTO, CA 95815
916-988-8808

ELECTRICAL CONSTRUCTORS AND ENGINEERS

BLYMYER ENGINEERS

1101 MARINA VILLAGE PKWY
ALAMEDA, CA 94501
510-521-3773

STRUCTURAL ENGINEERING AND STEEL CONSTRUCT

TEICHERT SOLAR

10620 TREENA STREET, STE 140
SAN DIEGO, CA 92131
562-283-2970

ARCHITECT OF RECORD

M M P V d e s i g n

Mariana Moncada, Architect
718 West Arbor Drive
San Diego, CA 92103
619.632.2883

ARCHITECT / ENGINEER OF RECORD

PROJECT

MALAGA COMMUNITY PARK & RECREATION CENTER

3582 S WINERY AVE
FRESNO, CA 93725

NO.	REVISION	DATE

DATE: 07.14.23

SHEET TITLE

WARNING LABELS

SHEET NO.:

E-9.0

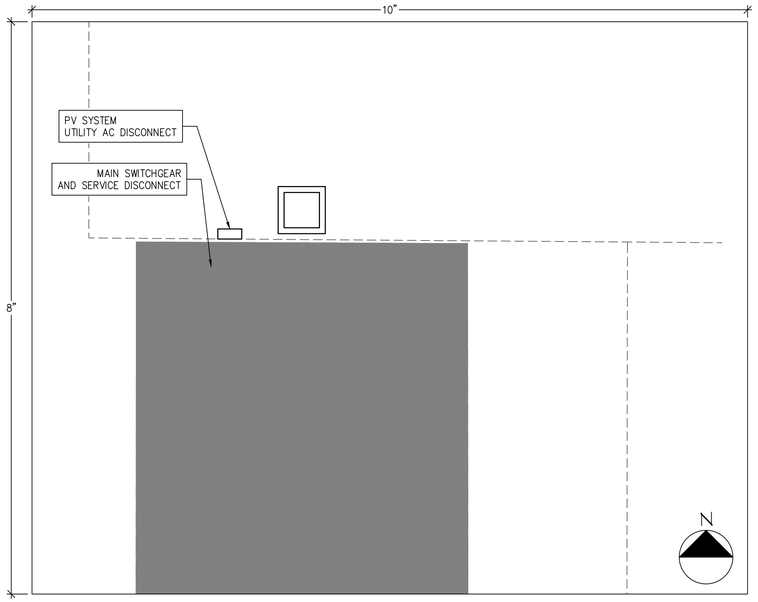

NOTES:

1. PLACE POWER SOURCE DIRECTORY AT MAIN SWITCHGEAR AND ACDS-1.
2. TEXT: MIN. 3/8" AND 1/4" HEIGHT, ALL CAPITAL LETTERS ARIAL OR SIMILAR FONT, NON-BOLD
3. MATERIAL: WEATHER AND UV RESISTANT VINYL WITH DURABLE ADHESIVE SUITABLE FOR THE ENVIRONMENT.

1 / - POWER SOURCE DIRECTORY
SCALE: 1:1

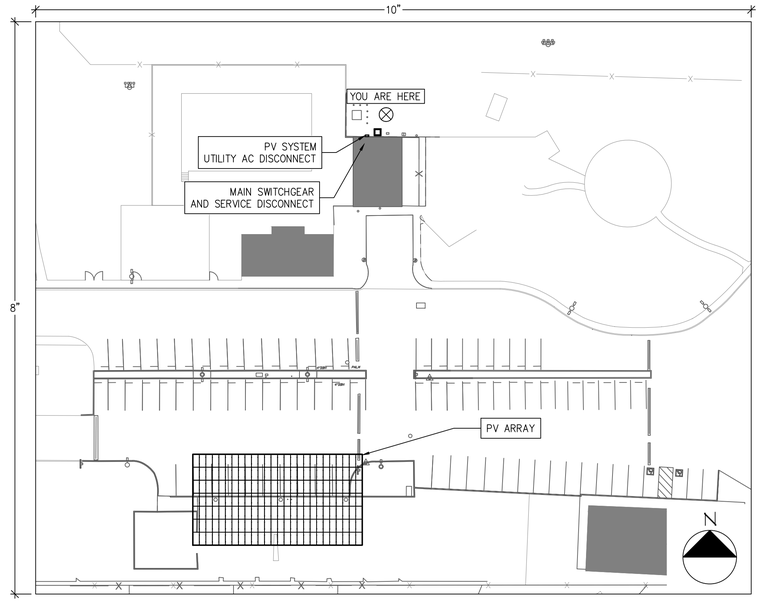

NOTES:

1. PLACE POWER SOURCE DIRECTORY AT MAIN SWITCHGEAR AND AC DISCONNECT.
2. TEXT: MIN. 3/8" AND 1/4" HEIGHT, ALL CAPITAL LETTERS ARIAL OR SIMILAR FONT, NON-BOLD
3. MATERIAL: WEATHER AND UV RESISTANT VINYL WITH DURABLE ADHESIVE SUITABLE FOR THE ENVIRONMENT.

2 / - POWER SOURCE SITE DIRECTORY
SCALE: 1:1

SYSTEM HOST

MALAGA COUNTY WATER DISTRICT
SERVING HOME AND INDUSTRY

3580 S. FRANK ST
FRESNO, CA 93725
559-485-7353

SYSTEM DEVELOPER

sitelogiq

1512 SILICA AVE
SACRAMENTO, CA 95815
916-988-8808

ELECTRICAL CONSTRUCTORS AND ENGINEERS

BLYMYER ENGINEERS

1101 MARINA VILLAGE PKWY
ALAMEDA, CA 94501
510-521-3773

STRUCTURAL ENGINEERING AND STEEL CONSTRUCT

TEICHERT SOLAR

10620 TREENA STREET, STE 140
SAN DIEGO, CA 92131
562-283-2970

ARCHITECT OF RECORD

M M P V d e s i g n

Mariana Moncada, Architect
718 West Arbor Drive
San Diego, CA 92103
619.632.2883

ARCHITECT / ENGINEER OF RECORD

PROJECT

MALAGA COMMUNITY PARK & RECREATION CENTER

3582 S WINERY AVE
FRESNO, CA 93725

NO.	REVISION	DATE

DATE: 07.14.23

SHEET TITLE

SITE DIRECTORY

SHEET NO.:

E-9.1

NEW

CanadianSolar

BiHiKu6

520 W ~ 545 W

BIFACIAL MONO PERC

CS6W-520|525|530|535|540|545MB-AG

MORE POWER

- 545 W — Module power up to 545 W; Module efficiency up to 21.2 %
- Up to 12.3 % lower LCOE; Up to 5.2 % lower system cost
- Comprehensive LID / LeTID mitigation technology, up to 50% lower degradation
- Compatible with mainstream trackers, cost effective product for utility power plant
- Better shading tolerance

MORE RELIABLE

- Minimizes micro-crack impacts
- Heavy snow load up to 5400 Pa, wind load up to 2400 Pa*

* For detailed information, please refer to Installation Manual.

12 Years — Enhanced Product Warranty on Materials and Workmanship*

30 Years — Linear Power Performance Warranty*

1st year power degradation no more than 2%
Subsequent annual power degradation no more than 0.45%

*According to the applicable Canadian Solar Limited Warranty Statement.

MANAGEMENT SYSTEM CERTIFICATES*

ISO 9001:2015 / Quality management system
ISO 14001:2015 / Standards for environmental management system
ISO 45001: 2018 / International standards for occupational health & safety

PRODUCT CERTIFICATES*

IEC 61215 / IEC 61730 / CE / INMETRO / MCS / UKCA
CEC listed (US California)
UL 61730 / IEC 61701 / IEC 62716 / IEC 60068-2-68
Take-e-way

* The specific certificates applicable to different module types and markets will vary, and therefore not all of the certifications listed herein will simultaneously apply to the products you order or use. Please contact your local Canadian Solar sales representative to confirm the specific certificates available for your Product and applicable in the regions in which the products will be used.

CSI SOLAR (USA) CO., LTD. is committed to providing high quality solar photovoltaic modules, solar energy and battery storage solutions to customers. The company was recognized as the No. 1 module supplier for quality and performance/price ratio in the IHS Module Customer Insight Survey. Over the past 20 years, it has successfully delivered over 63 GW of premium-quality solar modules across the world.

CSI SOLAR (USA) CO., LTD.
1350 Treat Blvd. Suite 500, Walnut Creek, CA 94598, USA | www.csisolar.com/na | service.ca@csisolar.com

ENGINEERING DRAWING (mm)

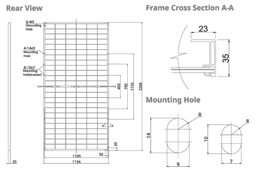

CS6W-530MB-AG / I-V CURVES

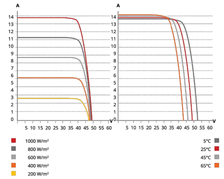

ELECTRICAL DATA | STC*

		Nominal Max. Power (Pmax)	Opt. Operating Voltage (Vmp)	Opt. Operating Current (Imp)	Open Circuit Voltage (Voc)	Short Circuit Current (Isc)	Module Efficiency
CS6W-520MB-AG		520 W	40.5 V	12.84 A	48.4 V	13.70 A	20.2%
Bifacial Gain**	5%	546 W	40.5 V	13.48 A	48.4 V	14.39 A	21.2%
	10%	572 W	40.5 V	14.12 A	48.4 V	15.07 A	22.3%
	20%	624 W	40.5 V	15.41 A	48.4 V	16.44 A	24.3%
CS6W-525MB-AG		525 W	40.7 V	12.90 A	48.6 V	13.75 A	20.4%
Bifacial Gain**	5%	551 W	40.7 V	13.55 A	48.6 V	14.44 A	21.4%
	10%	578 W	40.7 V	14.21 A	48.6 V	15.13 A	22.5%
	20%	630 W	40.7 V	15.48 A	48.6 V	16.50 A	24.5%
CS6W-530MB-AG		530 W	40.9 V	12.96 A	48.8 V	13.80 A	20.6%
Bifacial Gain**	5%	557 W	40.9 V	13.62 A	48.8 V	14.49 A	21.7%
	10%	583 W	40.9 V	14.26 A	48.8 V	15.18 A	22.7%
	20%	636 W	40.9 V	15.55 A	48.8 V	16.56 A	24.8%
CS6W-535MB-AG		535 W	41.1 V	13.02 A	49.0 V	13.85 A	20.8%
Bifacial Gain**	5%	562 W	41.1 V	13.68 A	49.0 V	14.54 A	21.9%
	10%	589 W	41.1 V	14.34 A	49.0 V	15.24 A	22.9%
	20%	642 W	41.1 V	15.62 A	49.0 V	16.62 A	25.0%
CS6W-540MB-AG		540 W	41.3 V	13.08 A	49.2 V	13.90 A	21.0%
Bifacial Gain**	5%	567 W	41.3 V	13.73 A	49.2 V	14.60 A	22.1%
	10%	594 W	41.3 V	14.39 A	49.2 V	15.29 A	23.1%
	20%	648 W	41.3 V	15.70 A	49.2 V	16.68 A	25.2%
CS6W-545MB-AG		545 W	41.5 V	13.14 A	49.4 V	13.95 A	21.2%
Bifacial Gain**	5%	572 W	41.5 V	13.80 A	49.4 V	14.65 A	22.3%
	10%	600 W	41.5 V	14.46 A	49.4 V	15.35 A	23.3%
	20%	654 W	41.5 V	15.77 A	49.4 V	16.74 A	25.5%

* Under Standard Test Conditions (STC) of irradiance of 1000 W/m², spectrum AM 1.5 and cell temperature of 25°C.
** Bifacial Gain: The additional gain from the back side compared to the power of the front side at the standard test condition. It depends on mounting (structure, height, tilt angle etc.) and albedo of the ground.

ELECTRICAL DATA

Operating Temperature	-40°C ~ +85°C
Max. System Voltage	1500 V (IEC/UL) or 1000 V (IEC/UL)
Module Fire Performance	TYPE 29 (UL 61730) or CLASS C (IEC61730)
Max. Series Fuse Rating	30 A
Application Classification	Class A
Power Tolerance	0 ~ + 10 W
Power Bifaciality*	70 %

* Power Bifaciality = Pmax__ / Pmax__, both Pmax__ and Pmax__ are tested under STC, Bifaciality Tolerance: ± 5 %

ELECTRICAL DATA | NMOT*

	Nominal Max. Power (Pmax)	Opt. Operating Voltage (Vmp)	Opt. Operating Current (Imp)	Open Circuit Voltage (Voc)	Short Circuit Current (Isc)
CS6W-520MB-AG	390 W	38.0 V	10.27 A	45.7 V	11.05 A
CS6W-525MB-AG	394 W	38.2 V	10.32 A	45.9 V	11.09 A
CS6W-530MB-AG	397 W	38.3 V	10.38 A	46.1 V	11.13 A
CS6W-535MB-AG	401 W	38.5 V	10.42 A	46.3 V	11.17 A
CS6W-540MB-AG	405 W	38.7 V	10.47 A	46.5 V	11.21 A
CS6W-545MB-AG	409 W	38.9 V	10.52 A	46.7 V	11.25 A

* Under Nominal Module Operating Temperature (NMOT), irradiance of 800 W/m², spectrum AM 1.5, ambient temperature 20°C, wind speed 1 m/s.

MECHANICAL DATA

Specification	Data
Cell Type	Mono-crystalline
Cell Arrangement	144 [2 x (12 x 6)]
Dimensions	2266 × 1134 × 35 mm (89.2 × 44.6 × 1.38 in)
Weight	32.2 kg (71.0 lbs)
Front Glass	2.0 mm heat strengthened glass with anti-reflective coating
Back Glass	2.0 mm heat strengthened glass
Frame	Anodized aluminium alloy
J-Box	IP68, 3 bypass diodes
Cable	4.0 mm² (IEC), 12 AWG (UL)
Cable Length (Including Connector)	410 mm (16.1 in) (+) / 290 mm (11.4 in) (-) or customized length*
Connector	T4 or MC4 series
Per Pallet	30 pieces
Per Container (40' HQ)	600 pieces or 540 pieces (only for US)

* For detailed information, please contact your local Canadian Solar sales and technical representatives.

TEMPERATURE CHARACTERISTICS

Specification	Data
Temperature Coefficient (Pmax)	-0.34 % / °C
Temperature Coefficient (Voc)	-0.26 % / °C
Temperature Coefficient (Isc)	0.05 % / °C
Nominal Module Operating Temperature	41 ± 3°C

PARTNER SECTION

* The specifications and key features contained in this datasheet may deviate slightly from our actual products due to the on-going innovation and product enhancement. CSI Solar Co., Ltd. reserves the right to make necessary adjustment to the information described herein at any time without further notice.
Please be kindly advised that PV modules should be handled and installed by qualified people who have professional skills and please carefully read the safety and installation instructions before using our PV modules.

1 PV MODULE
SCALE: NTS

CPS — Datasheet

50/60 kW, 1000 Vdc String Inverters for North America

The 50 & 60 kW (55 & 66 kVA) medium-power CPS three-phase string inverters are designed for ground mount, large rooftop and carport applications. The units are high performance, advanced and reliable inverters designed specifically for the North American environment and grid. High efficiency at 98.8% peak and 98.5% CEC, wide operating voltages, broad temperature ranges and a NEMA Type 4X enclosure enable this inverter platform to operate at high performance across many applications.

The CPS 50/60KTL products ship with either the Standard Wire-box or the Rapid Shutdown Wire-box, each fully integrated and separable with touch-safe fusing, monitoring, and AC and DC disconnect switches. The integrated PLC transmitter in the Rapid Shutdown Wire-box enables PVRSS certified module-level rapid shutdown when used with the Tigo TS4-F/TS4-A-F/TS4-A-2F products, APS RSD-S-PLC/RSD-D products, and NEP PVG-2 products. The CPS FlexOM Gateway enables monitoring, controls and remote product upgrades.

CPS SCA50KTL-DO/US-480
CPS SCA60KTL-DO/US-480

Key Features

- NEC 2017/2020 PVRSS certified for rapid shutdown
- 55 & 66 kVA rating allows max rated active power @ ±0.91 PF
- Selectable max AC apparent power of 50/55 kVA and 60/66 kVA
- NEC compliant and UL listed arc-fault circuit protection
- 15-90° mounting orientation for low profile roof installs
- Optional FlexOM Gateway enables remote firmware upgrades
- Integrated AC and DC disconnect switches
- 3 MPPTs with 5 inputs each for maximum flexibility
- NEMA Type 4X outdoor rated enclosure
- UL 1741-SA certified to CA Rule 21, including SA8 - SA18
- UL 1741-SB and IEEE 1547-2018 certified
- Separable wire-box design for fast service
- Standard 10-year warranty with extensions up to 20 years

50/60KTL Standard Wire-box

50/60KTL Rapid Shutdown Wire-box

Chint Power Systems America
1380 Presidential Drive, Suite 100, Richardson, TX 75081
Tel: 855-584-7168 Mail: AmericaSales@chintpower.com Web: www.chintpowersystems.com

2 PV INVERTER
SCALE: NTS

CPS — Datasheet

36 kW V2, 1000 Vdc String Inverters for North America

The new, V2 version of the 36 kW (36 kVA) CPS three-phase string inverter is designed for rooftop and carport applications. The units are high performance, advanced and reliable inverters designed specifically for the North American environment and grid. High efficiency at 98.8% peak and 97.4% CEC, wide operating voltages, broad temperature ranges and a NEMA Type 4X enclosure enable this inverter platform to operate at high performance across many applications.

CPS 36KTL V2 ships with either the Standard wire-box or the Rapid Shutdown wire-box, each fully integrated and separable with touch-safe fusing, monitoring, and AC and DC disconnect switches. The integrated PLC transmitter in the Rapid Shutdown Wire-box enables PVRSS certified module-level rapid shutdown when used with APS RSD-S-PLC/RSD-D products. The CPS FlexOM Gateway enables monitoring, controls and remote product upgrades.

CPS SCA36KTL-DO/US-480

Key Features

- NEC 2017/2020 PVRSS certified for rapid shutdown
- NEC-compliant & UL listed arc-fault circuit protection
- 15-90° mounting orientation for low-profile roof installs
- Optional FlexOM Gateway enables remote firmware upgrades
- Integrated AC and DC disconnect switches
- Copper- and Aluminum-compatible AC connections
- 3 MPPTs with 5 inputs each for maximum flexibility
- NEMA Type 4X outdoor rated enclosure
- UL 1741-SA certified to CA Rule 21, including SA8-SA18 VW
- UL 1741-SB and IEEE 1547-2018 certified
- Separable wire-box design for fast service
- Standard 10-year warranty with extensions up to 20 years

36/50/60KTL Standard Wire-box

36/50/60KTL Rapid Shutdown Wire-box

Chint Power Systems America
1380 Presidential Drive, Suite 100, Richardson, TX 75081
Tel: 855-584-7168 Mail: AmericaSales@chintpower.com Web: www.chintpowersystems.com

3 PV INVERTER
SCALE: NTS

CPS — Technical Data

Model Name	CPS SCA50KTL-DO/US-480	CPS SCA60KTL-DO/US-480
DC Input		
Max. PV power	90 kW (33 kW per MPPT)	
Max. DC input voltage	1000 Vdc	
Operating DC input voltage range	200-950 Vdc	
Start-up DC input voltage / power	330 V / 80 W	
Number of MPP trackers	3	
MPPT voltage range @ PF=0.99	480-850 Vdc	540-850 Vdc
Max. PV short-circuit current (Isc x 1.25)	204 A (68 A per MPPT)	
Number of DC inputs	15 inputs, 5 per MPPT	
DC disconnection type	Load-rated DC switch	
DC surge protection	Type II MOV	
AC Output		
Rated AC output power @ PF>0.99 to ±0.91[1]	50 kW	60 kW
Max. AC apparent power (selectable)	50 / 55 kVA	60 / 66 kVA
Rated output voltage	480 Vac	
Output voltage range[2]	422 - 528 Vac	
Grid connection type	3Ø / PE / N (Neutral optional)	
Max. AC output current @ 480 Vac	60.2 / 66.2 A	72.2 / 79.4 A
Rated output frequency	60 Hz	
Output frequency range[2]	57 - 63 Hz	
Power factor	>0.99 (±0.8 adjustable)	
Current THD @ rated load	<3%	
Max. fault current contribution (1 cycle RMS)	64.1 A (1.06/0.88 PU)	
Max. OCPD rating	110 A	125 A
AC disconnection type	Load-break rated AC switch	
AC surge protection	Type II MOV	
System and Performance		
Topology	Transformerless	
Max. efficiency	98.8%	
CEC efficiency	98.5%	
Stand-by / night consumption	<1 W	
Environment		
Enclosure protection degree	NEMA Type 4X	
Cooling method	Variable speed cooling fans	
Operating temperature range[3]	-22°F to +140°F / -30°C to +60°C	
Non-operating temperature range[4]	No low temp minimum to +158°F / +70°C maximum	
Operating humidity	0 to 100%	
Operating altitude	13123 ft / 4000 m (derating from 9843 ft / 3000 m)	
Audible noise	<60 dBA @ 1 m and 25°C	
Display and Communication		
User interface and display	LCD+LED	
Inverter monitoring	SunSpec, Modbus RS485	
Site-level monitoring	CPS FlexOM Gateway (1 per 32 inverters)	
Modbus data mapping	CPS	
Remote diagnostics / firmware upgrade functions	Standard / (with FlexOM Gateway)	
Mechanical		
Dimensions (H x W x D)	39.4 x 23.6 x 10.24 in (1000 x 600 x 260 mm)	
Weight	Inverter: 123.5 lbs (56 kg); Wire-box: 33 lbs (15 kg)	
Mounting / installation angle[5]	15 to 90 degrees from horizontal (vertical or angled)	
AC termination	M8 stud type terminal block (wire range: #6 - 3/0 AWG CU/AL; lugs not supplied)	
DC termination[6]	Screw clamp, neg. busbar (RSD version[9]) wire range: #14 - #6 AWG CU	
Fused string inputs (5 per MPPT)[7]	RSD[9] and Standard Wire-box: 20 A fuses provided (fuse values up to 30 A acceptable)	
Safety		
Certifications and standards	UL 1741-SA/SB Ed. 3, UL 1699B, UL 1998, CSA-C22.2 NO.107.1-01, IEEE 1547-2018, FCC PART15	
Selectable grid standard	IEEE 1547a-2014, IEEE 1547-2018[8], CA Rule 21, ISO-NE, HECO	
Smart-grid features	Volt-RideThru, Freq-RideThru, Ramp-Rate, Specified-PF, Volt-VAR, Freq-Watt, Volt-Watt	
Warranty		
Standard	10 years	
Extended terms	15 and 20 years	

1) Active power derating begins at PF = ±0.91 to ±0.80 when max AC apparent power is set to 55 or 66 kVA.
2) The "output voltage range" and "output frequency range" may differ according to the specific grid standard.
3) Active power derating begins at 40°C when PF = ±0.9 and MPPTx3Vmin; at 45°C when PF = 1 and MPPTx3Vmin; and at 50°C when PF = 1 and MPPTx700 Vdc.
4) See user manual for further requirements regarding non-operating conditions.
5) Shade cover accessory required for installation angles of 75 degrees or less.
6) RSD wire-box only includes fuses and fuse holders on the positive polarity, compliant with NEC 2017/2020.
7) Fuse values above 20 A have additional spacing requirements or require the use of the T-Comb Terminal Block. See user manual for more details.
8) Firmware version 17.0 or later required.

CPS — Technical Data

Model Name	CPS SCA36KTL-DO/US-480
DC Input	
Max. PV power	61.2 kW (22.4 kW per MPPT)
Max. DC input voltage	1000 Vdc
Operating DC input voltage range	200-950 Vdc
Start-up DC input voltage / power	330 V / 80 W
Number of MPP trackers	3
MPPT voltage range @ PF>0.99	400-850 Vdc
Max. PV short-circuit current (Isc x 1.25)	204 A (68 A per MPPT)
Number of DC inputs	15 inputs, 5 per MPPT
DC disconnection type	Load-rated DC switch
DC surge protection	Type II MOV
AC Output	
Rated AC output power @ PF>0.99	36 kW
Max. AC apparent power (selectable)	36 kVA
Rated output voltage	480 Vac
Output voltage range[1]	422 - 528 Vac
Grid connection type	3Ø / PE / N (neutral optional)
Max. AC output current @ 480 Vac	43.5 A
Rated output frequency	60 Hz
Output frequency range[1]	57 - 63 Hz
Power factor	>0.99 (±0.8 adjustable)
Current THD @ rated load	<3%
Max. fault current contribution (1 cycle RMS)	73.2 A (1.68 PU)
Max. OCPD rating	125 A
AC disconnection type	Load-break rated AC switch
AC surge protection	Type II MOV
System and Perfomance	
Topology	Transformerless
Max. efficiency	98.8%
CEC efficiency	97.4%
Stand-by / night consumption	<3 W
Environment	
Enclosure protection degree	NEMA Type 4X
Cooling method	Variable speed cooling fans
Operating temperature range[2]	-22°F to +140°F / - 30°C to +60°C
Non-operating temperature range[3]	No low temp minimum to +158°F / +70°C maximum
Operating humidity	0 to 100%
Operating altitude	13123 ft / 4000 m (derating from 9843 ft / 3000 m)
Audible noise	<60 dBA @ 1 m and 25°C
Display and Communication	
User interface and display	LCD + LED
Inverter monitoring	SunSpec, Modbus RS485
Site-level monitoring	CPS FlexOM Gateway (1 per 32 Inverters)
Modbus data mapping	CPS
Remote diagnostics / firmware upgrade functions	Standard / (with FlexOM Gateway)
Mechanical	
Dimensions (H x W x D)	39.4 x 23.6 x 10.24 in (1000 x 600 x 260 mm)
Weight	Inverter: 123.5 lbs (56 kg); Wire-box: 33 lbs (15 kg)
Mounting / installation angle[4]	15 to 90 degrees from horizontal (vertical or angled)
AC termination	M8 stud type terminal block (wire range: #6 - 3/0 AWG CU/AL; lugs not supplied)
DC termination[5]	Screw clamps, neg. busbar (RSD version[7]) wire range: #14 - #6 AWG CU
Fused string inputs (5 per MPPT)[6]	20 A fuses provided (fuse values up to 30 A acceptable)
Safety	
Certifications and standards	UL 1741-SA/SB Ed. 3, UL 1699B, UL 1998, CSA-C22.2 NO.107.1-01, IEEE 1547-2018, FCC PART15
Selectable grid standard	IEEE 1547a-2014, IEEE 1547-2018[7], CA Rule 21, ISO-NE, HECO
Smart-grid features	Volt-RideThru, Freq-RideThru, Ramp-Rate, Specified-PF, Volt-VAR, Freq-Watt, Volt-Watt
Warranty	
Standard	10 years
Extended terms	15 and 20 years

1) The output voltage and frequency ranges may differ according to the specific grid standard.
2) Active power derating begins at 45°C when PF=1 and MPPTx1Vmin, and at 50°C when PF=1 and MPPTx700 Vdc.
3) See user manual for further requirements regarding non-operating conditions.
4) Shade Cover accessory required for installation angles of 75 degrees or less.
5) RSD wire-box only includes fuses and fuse holders on the positive polarity, compliant with NEC 2017/2020 Section 690.8(C).
6) Fuse values above 20 A have additional spacing requirements or require the use of the T-Comb Terminal Block. See the user manual for further details.
7) Firmware version 18.0 or later required.

SYSTEM HOST

MALAGA COUNTY WATER DISTRICT — SERVING HOME AND INDUSTRY

3580 S. FRANK ST
FRESNO, CA 93725
559-485-7353

SYSTEM DEVELOPER

sitelogiQ

1512 SILICA AVE
SACRAMENTO, CA 95815
916-988-8808

ELECTRICAL CONSTRUCTORS AND ENGINEERS

BLYMYER ENGINEERS

1101 MARINA VILLAGE PKWY
ALAMEDA, CA 94501
510-521-3773

STRUCTURAL ENGINEERING AND STEEL CONSTRUCT

TEICHERT SOLAR

10620 TREENA STREET, STE 140
SAN DIEGO, CA 92131
562-283-2970

ARCHITECT OF RECORD

M M P V d e s i g n

Mariana Moncada, Architect
718 West Arbor Drive
San Diego, CA 92103
619.632.2883

ARCHITECT / ENGINEER OF RECORD

PROJECT

MALAGA COMMUNITY PARK & RECREATION CENTER

3582 S WINERY AVE
FRESNO, CA 93725

NO.	REVISION	DATE

DATE: 07.14.23

SHEET TITLE

EQUIPMENT SPECIFICATIONS

SHEET NO.:

E-10.0

MALAGA CWD - WATER TREATMENT PLANT SOLAR PROJECT

3749 S MAPLE AVE
FRESNO, CA 93725

CALL 811 DIG ALERT PRIOR TO EXCAVATING:

COMPLIANCE WITH GOVERNMENT CODE 4216 IS TO BE FOLLOWED PRIOR TO ANY EXCAVATION TAKING PLACE.

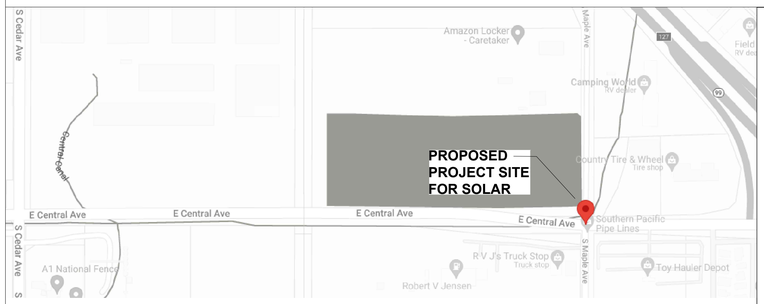

VICINITY MAP

N SCALE NTS

PROJECT DIRECTORY

SYSTEM HOST:
MALAGA COUNTY WATER DISTRICT
3580 S. Frank Street
FRESNO, CA 93725
559.485.7319

DEVELOPER
SITELOGIQ
1512 SILICA AVENUE
SACRAMENTO, CA 95815
916-988-8808
CALVIN OLSEN

ELECTRICAL ENGINEER:
BLYMER
1101 MARIANA VILLAGE PKWY
SUITE 100
ALAMEDA, CA 94501
JOON SUK CHOI
510.521.3773

GENERAL CONTRACTOR
BEI CONSTRUCTION INC.
1101 MARIANA VILLAGE PKWY
SUITE 100
ALAMEDA, CA 94501
TYLER FROATS
(510) 521-3792

ARCHITECT & DESIGN PROFESSIONAL IN CHARGE:
MMPV DESIGN, INC.
718 W ARBOR DR
SAN DIEGO, CA 92103
619.632.2883
AOR: MARIANA MONCADA

STRUCTURAL ENGINEER:
TKJ STRUCTURAL ENGINEERING
9820 WILLOW CREEK RD #490
SAN DIEGO, CA 92131
858.649.1700
YESENIA GRAMAJO

GEOTECHNICAL ENGINEER:
GEO-ENGINEERING SOLUTIONS, INC.
2570 SAN RAMON VALLEY BLVD
SUITE #A102
SAN RAMON, CA 94583
925.433.0450
COLIN FROST

DRAWING INDEX

GOVERNING CODES:

CALIFORNIA CODE OF REGULATIONS:
2022 CALIFORNIA ADMINISTRATIVE CODE (CAC) ..... (PART 1, TITLE 24, CCR)
2022 CALIFORNIA BUILDING CODE (CBC), VOLUMES 1, AND 2 (PART 2, TITLE 24, CCR)
(2018 EDITION INTERNATIONAL BUILDING CODE WITH 2019 CALIFORNIA AMENDMENTS)
2022 CALIFORNIA ELECTRICAL CODE ..... (PART 3, TITLE 24, CCR)
(2017 EDITION NATIONAL ELECTRICAL CODE WITH 2019 CALIFORNIA AMENDMENTS)
2022 CALIFORNIA MECHANICAL CODE (CMC) ..... (PART 4, TITLE 24, CCR)
(2018 EDITION IAPMO UNIFORM MECHANICAL CODE WITH 2019 CALIFORNIA AMENDMENTS)
2022 CALIFORNIA PLUMBING CODE (CPC) ..... (PART 5, TITLE 24, CCR)
(2018 EDITION IAPMO UNIFORM PLUMBING CODE WITH 2019 CALIFORNIA AMENDMENTS)
2022 CALIFORNIA ENERGY CODE ..... (PART 6, TITLE 24, CCR)
(2018 EDITION CALIFORNIA ENERGY COMMISSION BUILDING ENERGY EFFICIENCY STANDARDS)
2022 CALIFORNIA FIRE CODE (CFC) ..... (PART 9, TITLE 24, CCR)
(2018 EDITION OF INTERNATIONAL FIRE CODE WITH 2019 CALIFORNIA AMENDMENTS)
2022 CALIFORNIA GREEN CODE ..... (PART 11, TITLE 24, CCR)
2022 CALIFORNIA REFERENCED STANDARDS CODE ..... (PART 12, TITLE 24, CCR)
NFPA 13 - 2022
NFPA 72 - 2022

REFERENCE CODE SECTIONS FOR APPLICABLE STANDARDS:

2022 CBC, CHAPTER 35
2022 CFC, CHAPTER 80

INSPECTIONS:

SAFETY DURING CONSTRUCTION TO COMPLY WITH 2022 CFC CHAPTER 33

NOTES:

1) NOTICE TO THE APPLICANT/OWNER/OWNER'S AGENT/ARCHITECT OR ENGINEER OF RECORD: BY USING THIS PERMITTED CONSTRUCTION DRAWINGS FOR CONSTRUCTION.INSTALLATION OF THE WORK SPECIFIED HEREIN, YOU AGREE TO COMPLY WITH THE REQUIREMENTS OF THE AUTHORITY HAVING JURISDICTION FOR SPECIAL INSPECTIONS, STRUCTURAL OBSERVATIONS, CONSTRUCTION MATERIAL TESTING AND OFF-SITE FABRICATION OF BUILDING COMPONENTS, CONTAINED IN THE STATEMENT OF SPECIAL INSPECTIONS AND AS, REQUIRED BY THE CALIFORNIA CONSTRUCTION CODES.

2) LOCATIONS AND CLASSIFICATIONS OF EXTINGUISHERS SHALL BE IN ACCORDANCE WITH CFC 906 AND CALIFORNIA CODE OF REGULATIONS (CCR), TITLE 19.

3) DURING CONSTRUCTION, AT LEAST ONE EXTINGUISHER SHALL BE PROVIDED ON EACH FLOOR LEVEL AT EACH STAIRWAY, IN ALL STORAGE AND CONSTRUCTION SHEDS, IN LOCATIONS WHERE FLAMMABLE OR COMBUSTIBLE LIQUIDS ARE STORED OR USED, AND WHERE OTHER SPECIAL HAZARDS ARE PRESENT PER CFC SECTION 3315.1.

4) BUILDINGS UNDERGOING CONSTRUCTION, ALTERATION, OR DEMOLITION SHALL CONFORM TO CFC CHAPTER 33. WELDING, CUTTING, AND OTHER HOT WORK SHALL BE IN CONFORMANCE WITH CFC CHAPTER 35.

5) ADDRESS IDENTIFICATION SHALL BE PROVIDED FOR ALL NEW AND EXISTING BUILDINGS IN A LOCATION THAT IS PLAINLY VISIBLE AND LEGIBLE FROM THE STREET OR ROAD FRONTING THE PROPERTY. WHERE ACCESS IS BY WAY OF A PRIVATE ROAD AND THE BUILDING ADDRESS CANNOT BE VIEWED FROM THE PUBLIC WAY, AN APPROVED SIGN OR MEANS SHALL BE USED TO IDENTIFY THE STRUCTURE. PREMISES IDENTIFICATION SHALL CONFORM TO CBC SECTION 501.2.

6) DUMPSTERS AND TRASH CONTAINERS EXCEEDING 1.5 CUBIC YARDS SHALL NOT BE STORED IN BUILDINGS OR PLACED WITHIN 5 FEET OF COMBUSTIBLE WALLS, OPENINGS OR COMBUSTIBLE ROOF EAVE LINES UNLESS PROTECTED BY AND APPROVED SPRINKLER SYSTEM OR LOCATED IN A TYPE I OR TYPE IIA STRUCTURE SEPARATED BY 10 FEET FROM OTHER STRUCTURES. CONTAINERS LARGER THAN 1 CUBIC YARD SHALL BE OF NON-LIMITED COMBUSTIBLE MATERIALS OR SIMILARLY PROTECTED OR SEPARATED. CFC 304.3.

7) EXITS, EXIT SIGNS, FIRE ALARM PANELS, HOSE CABINETS, FIRE EXTINGUISHER LOCATIONS, AND STANDPIPE CONNECTIONS SHALL NOT BE CONCEALED BY CURTAINS, MIRRORS, OR OTHER DECORATIVE MATERIAL.

8) THE EGRESS PATH SHALL REMAIN FREE AND CLEAR OF ALL OBSTRUCTIONS AT ALL TIMES. NO STORAGE IS PERMITTED IN ANY EGRESS PATHS.

SCOPE OF WORK :

WORK CONSISTS OF INSTALLING (2) PHOTOVOLTAIC (PV) SOLAR POWER ARRAYS OVER A NON SPECIFIED USE GRAVEL AREA. SOLAR POWER SYSTEM CONSISTS OF EQUIPMENT, PV MONITORING AND METERING COMMUNICATIONS AND POWER INTERCONNECT TO THE UTILITY GRID.

TOTAL MODULE COUNT: 653
KILOWATTS DC: 284 kW
TOTAL ARRAYS: 3

DEFERRED SUBMITTALS: NONE

NEW PHOTOVOLTAIC ARRAY CODE ANALYSIS

SYSTEM DESCRIPTION: Module Type CS6W-540MB-AG (2132MM X 1048MM X 30MM) 28.4 kg

Array Name	Array			Total Modules	kW DC	No. of Cols	Minimum Clear Height	Azimuth	SOUTH Tilt	WEST Tilt	Occupancy	Const. Type	Area	Allowable Area
A	7	x	37	259	112.67	4	14'-0"	270.0 °	7 °	5 °	UTILITY	II-B	7,253 SF	-
												TOTAL AREA ARRAY 'A':	**7,253 SF**	**8500**
B	7	x	37	259	112.67	4	14'-0"	180.0 °	7 °	5 °	UTILITY	II-B	7,253 SF	-
												TOTAL AREA ARRAY 'B':	**7,253 SF**	**8500**
C	5	x	27	135	58.73	3	13'-6"	270.0 °	7 °	5 °	UTILITY	II-B	3,779 SF	-
												TOTAL AREA ARRAY 'C':	**3,779 SF**	**8500**
			TOTALS:	**653**	**284**	**11**						**TOTAL PROJECT AREA:**	**18,285 SF**	**-**

SHEET NOTES

1. SEE SHEET A1.0 FOR ARRAY DIMENSIONS
2. ARROWS ON PLAN POINT TO LOW SIDE OF CANOPY

SITE INFORMATION

PROJECT ADDRESS: 3749 S MAPLE RD, FRESNO, CA 93725
APN: 330-100-12T
JURISDICTION: FRESNO COUNTY

SYSTEM HOST

3580 S. FRANK ST
FRESNO, CA 93725
559-485-7353

SYSTEM DEVELOPER

1512 SILICA AVE
SACRAMENTO, CA 95815
916-988-8808

ELECTRICAL CONSTRUCTORS AND ENGINEERS

1101 MARINA VILLAGE PKWY
ALAMEDA, CA 94501
510-521-3773

STRUCTURAL ENGINEERING AND STEEL CONSTRUCT

10620 TREENA STREET, STE 140
SAN DIEGO, CA 92131
562-283-2970

ARCHITECT OF RECORD

M M P V d e s i g n

Mariana Moncada, Architect
718 West Arbor Drive
San Diego, CA 92103
619.632.2883

ARCHITECT / ENGINEER OF RECORD

PROJECT

MALAGA CWD - WATER TREATMENT PLANT

3749 S MAPLE AVE
FRESNO, CA 93725

NO.	REVISION	DATE

DATE: 07.14.23

SHEET TITLE

TITLE SHEET

SHEET NO.:

MW-A0.0

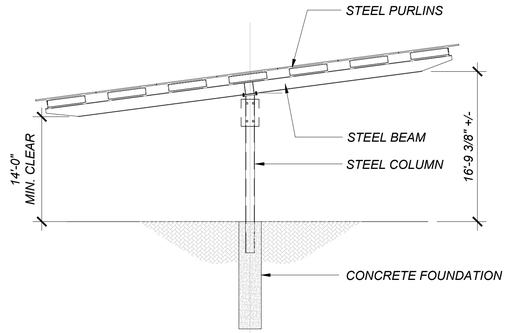

3 SECTON @ ARRAY [A & B]
Scale: 1/8" = 1'-0" (FOR 24X36 SHEETS)

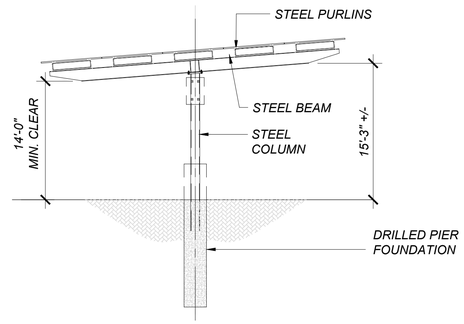

4 SECTON @ ARRAY [C]
Scale: 1/8" = 1'-0" (FOR 24X36 SHEETS)

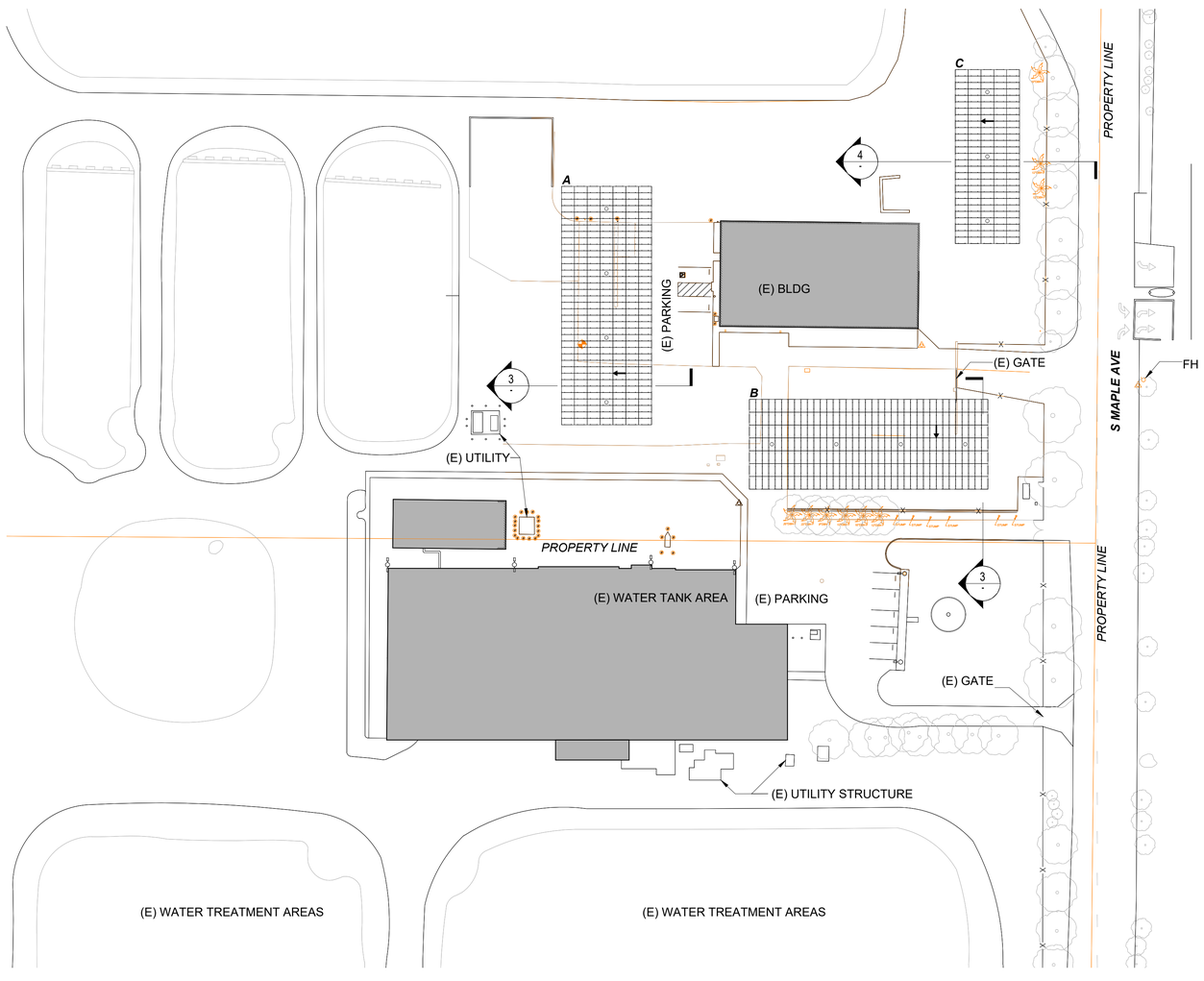

N

1 SITE PLAN
Scale: 1" = 40' (FOR 24X36 SHEETS)

20 40 80

NEW PHOTOVOLTAIC ARRAY CODE ANALYSIS

SYSTEM DESCRIPTION: Module Type CS6W-540MB-AG (2132MM X 1048MM X 30MM) 28.4 kg

Array Name	Array			Total Modules	kW DC	No. of Cols	Minimum Clear Height	Azimuth	SOUTH Tilt	WEST Tilt	Occupancy	Const. Type	Area	Allowable Area
A	7	x	37	259	112.67	4	14'-0"	270.0 °	7 °	5 °	UTILITY	II-B	7,253 SF	-
												TOTAL AREA ARRAY 'A':	7,253 SF	8500
B	7	x	37	259	112.67	4	14'-0"	180.0 °	7 °	5 °	UTILITY	II-B	7,253 SF	-
												TOTAL AREA ARRAY 'B':	7,253 SF	8500
C	5	x	27	135	58.73	3	13'-6"	270.0 °	7 °	5 °	UTILITY	II-B	3,779 SF	-
												TOTAL AREA ARRAY 'C':	3,779 SF	8500
			TOTALS:	653	284	11						TOTAL PROJECT AREA:	18,285 SF	-

SHEET NOTES

1. SEE SHEET A1.0 FOR ARRAY DIMENSIONS
2. ARROWS ON PLAN POINT TO LOW SIDE OF CANOPY

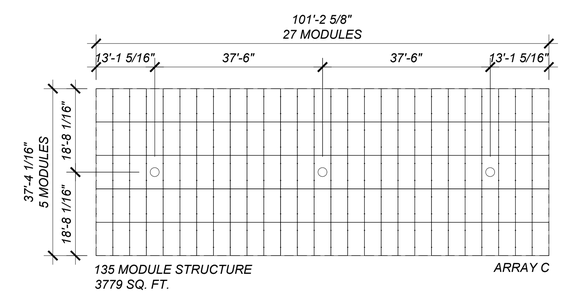

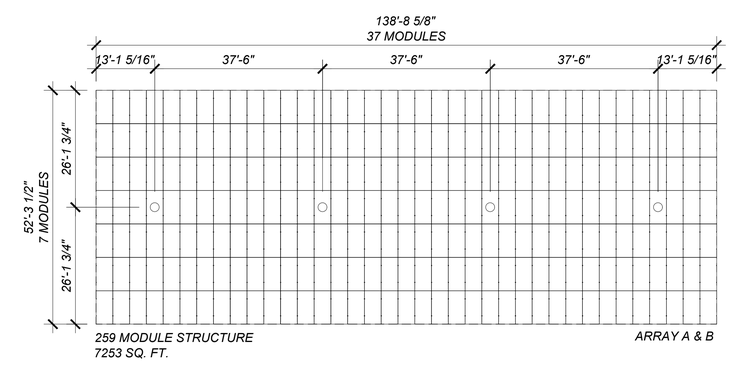

2 ARRAY DIMENSIONS
Scale: 1/16" = 1'-0" (FOR 24X36 SHEETS)

SYSTEM HOST

MALAGA COUNTY WATER DISTRICT
SERVING HOME AND INDUSTRY
3580 S. FRANK ST
FRESNO, CA 93725
559-485-7353

SYSTEM DEVELOPER

sitelogiQ
1512 SILICA AVE
SACRAMENTO, CA 95815
916-988-8808

ELECTRICAL CONSTRUCTORS AND ENGINEERS

BLYMYER ENGINEERS
1101 MARINA VILLAGE PKWY
ALAMEDA, CA 94501
510-521-3773

STRUCTURAL ENGINEERING AND STEEL CONSTRUCT

TEICHERT SOLAR
10620 TREENA STREET, STE 140
SAN DIEGO, CA 92131
562-283-2970

ARCHITECT OF RECORD

M M P V d e s i g n

Mariana Moncada, Architect
718 West Arbor Drive
San Diego, CA 92103
619.632.2883

ARCHITECT / ENGINEER OF RECORD

PROJECT

MALAGA CWD - WATER TREATMENT PLANT

3749 S MAPLE AVE
FRESNO, CA 93725

NO.	REVISION	DATE

DATE:
07.14.23

SHEET TITLE

SITE PLAN

SHEET NO.:

MW-A1.0

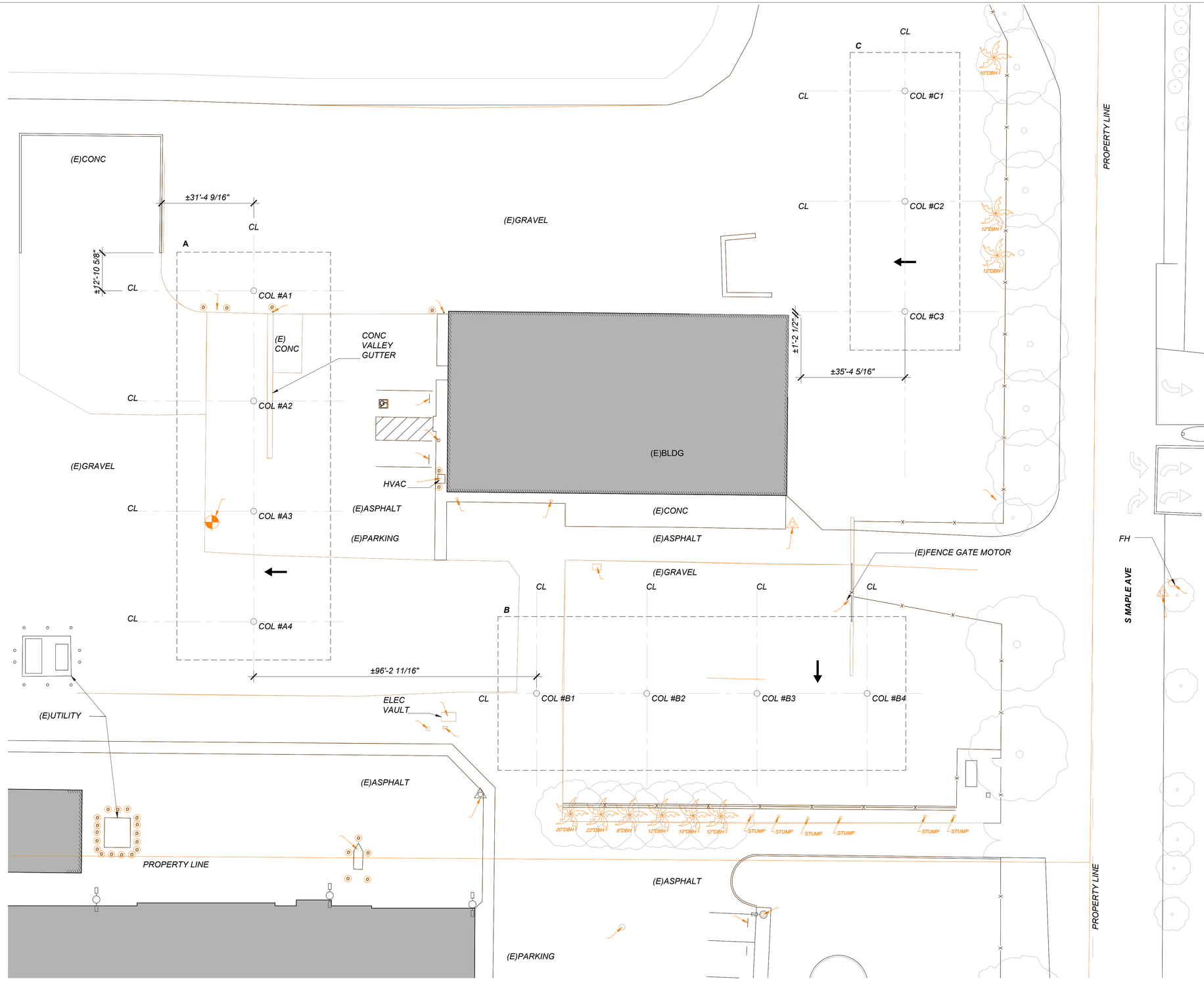

N

1 COLUMN PLAN
Scale: 1/16" = 1' (FOR 24X36 SHEETS)

SYSTEM HOST

MALAGA COUNTY WATER DISTRICT
SERVING HOME AND INDUSTRY

3580 S. FRANK ST
FRESNO, CA 93725
559-485-7353

SYSTEM DEVELOPER

sitelogiq

1512 SILICA AVE
SACRAMENTO, CA 95815
916-988-8808

ELECTRICAL CONSTRUCTORS AND ENGINEERS

BLYMYER ENGINEERS

1101 MARINA VILLAGE PKWY
ALAMEDA, CA 94501
510-521-3773

STRUCTURAL ENGINEERING AND STEEL CONSTRUCT

TEICHERT SOLAR

10620 TREENA STREET, STE 140
SAN DIEGO, CA 92131
562-283-2970

ARCHITECT OF RECORD

M M P V d e s i g n

Mariana Moncada, Architect
718 West Arbor Drive
San Diego, CA 92103
619.632.2883

ARCHITECT / ENGINEER OF RECORD

PROJECT

MALAGA CWD - WATER TREATMENT PLANT

3749 S MAPLE AVE
FRESNO, CA 93725

NO.	REVISION	DATE

DATE:
07.14.23

SHEET TITLE

COLUMN PLAN

SHEET NO.:

MW-A1.1

GENERAL STRUCTURAL NOTES

DESIGN CRITERIA

BUILDING CODE: 2022 CALIFORNIA BUILDING CODE, REFERRED TO AS "THE CODE"
GOVERNING JURISDICTION: CITY OF FRESNO, CA
OCCUPANCY TYPE: S-2

ROOF LIVE LOADS:
DISTRIBUTED = 12 PSF *
POINT LOAD = 300 LBS **

* NON-CONCURRENT W/ PV PANEL DEAD LOAD & WIND LOAD
** CONCURRENT W/ PV PANEL DEAD

SNOW LOADS:
MAXIMUM GROUND SNOW LOAD = 0 PSF

WIND ANALYSIS: DIRECTIONAL PROCEDURE PER ASCE 7, CHAPTER 27
BASIC WIND SPEED, V = 93 MPH
WIND EXPOSURE = CATEGORY C
RISK CATEGORY = II
GUST EFFECT FACTOR, G = 0.85
INTERNAL PRESSURE COEFFICIENT, GCpi = ±0

SEISMIC CRITERIA:
SITE CLASSIFICATION = D
RISK CATEGORY = II
SEISMIC DESIGN CATEGORY = D
SEISMIC ANALYSIS: ASCE 7-16, CHAPTER 15
SEISMIC FORCE-RESISTING SYSTEM = INVERTED PENDULUM
RESPONSE MODIFICATION COEFFICIENT, R = 2.0
SYSTEM OVERSTRENGTH FACTOR, Ω0 = 2.0
DEFLECTION AMPLIFICATION FACTOR, Cd = 2.0
SEISMIC IMPORTANCE FACTOR, IE = 1.0
REDUNDANCY FACTOR, ρ = 1.0 longitudinal
REDUNDANCY FACTOR, ρ = 1.3 transverse
Ss= 0.612g, Sds = 0.535g
S1 = 0.234g
SEISMIC BASE SHEAR.....Cs = 0.2675W

GENERAL

1. THE CONTRACTOR SHALL VERIFY ALL DIMENSIONS PRIOR TO STARTING CONSTRUCTION. DO NOT SCALE THE DRAWINGS. THE ENGINEER SHALL BE NOTIFIED OF ANY DISCREPANCIES OR INCONSISTENCIES. SUBMIT CLARIFICATION REQUEST PRIOR TO PROCEEDING WITH WORK.
2. ALL DRAWINGS ARE CONSIDERED TO BE A PART OF THE CONTRACT DOCUMENTS. THE CONTRACTOR SHALL BE RESPONSIBLE FOR THE REVIEW AND COORDINATION OF ALL DRAWINGS PRIOR TO THE START OF CONSTRUCTION. ANY DISCREPANCIES THAT OCCUR SHALL BE BROUGHT TO THE ATTENTION OF THE ENGINEER PRIOR TO START OF CONSTRUCTION SO THAT A CLARIFICATION CAN BE ISSUED. ANY DEVIATION FROM THE APPROVED SET OF CONTRACT DOCUMENTS SHALL ONLY BE MADE AFTER WRITTEN APPROVAL BY THE ENGINEER OF RECORD. ANY WORK PERFORMED IN CONFLICT WITH THE CONTRACT DOCUMENTS OR ANY CODE REQUIREMENTS SHALL BE CORRECTED BY THE CONTRACTOR AT THEIR OWN EXPENSE.
3. NOTES AND DETAILS ON DRAWINGS SHALL TAKE PRECEDENCE OVER GENERAL NOTES AND TYPICAL DETAILS. WHERE NO DETAILS ARE GIVEN, CONSTRUCTION SHALL BE AS SHOWN FOR SIMILAR WORK. UNLESS NOTED OTHERWISE, DETAILS IN STRUCTURAL DRAWINGS ARE TYPICAL AS INDICATED BY CUTS, REFERENCES OR TITLES.
4. ALL WORK SHALL CONFORM TO THE MINIMUM STANDARDS OF THE FOLLOWING LOCAL BUILDING CODE, AND ANY OTHER REGULATING AGENCIES WHICH HAVE AUTHORITY OVER ANY PORTION OF THE WORK AND THOSE CODES AND STANDARDS LISTED IN THESE NOTES AND SPECIFICATIONS.
5. THE CONTRACT STRUCTURAL DRAWINGS AND SPECIFICATIONS REPRESENT THE FINISHED STRUCTURE. THEY DO NOT INDICATE THE METHOD OF CONSTRUCTION. THE CONTRACTOR SHALL PROVIDE ALL MEASURES NECESSARY TO PROTECT THE STRUCTURE DURING CONSTRUCTION. SUCH MEASURES SHALL INCLUDE, BUT NOT BE LIMITED TO, BRACING, SHORING FOR LOADS DUE TO CONSTRUCTION EQUIPMENT, ETC. OBSERVATION VISITS TO THE SITE BY THE STRUCTURAL ENGINEER SHALL NOT INCLUDE INSPECTION OF THE ABOVE ITEMS.
6. ALL REFERENCED STANDARDS (i.e. ACI, AISC, ASTM, ETC.) SHOWN IN THESE DOCUMENTS SHALL BE PER THE LATEST ADOPTED EDITION AS LISTED IN CHAPTER 35 OF THE CODE.
7. CONTRACTOR TO PROVIDE A LIST OF ALL PROPOSED SUBSTITUTIONS, WITH APPLICABLE MANUFACTURER'S ICC/IAPMO REPORTS, TO ARCHITECT, ENGINEER OF RECORD AND GOVERNING JURISDICTION FOR REVIEW AND APPROVAL BEFORE FABRICATION.

POST-INSTALLED CONCRETE ANCHORS

1. POST-INSTALLED ANCHORAGE SHALL BE AS DETAILED ON THE PLANS. SUBSTITUTION OF PRODUCTS SPECIFICALLY DETAILED IN THESE DRAWINGS SHALL NOT BE ALLOWED WITHOUT WRITTEN APPROVAL FROM THE STRUCTURAL ENGINEER OF RECORD.
2. SPECIAL INSPECTION IS REQUIRED FOR ALL POST-INSTALLED ANCHORS, U.N.O.
3. WHERE ANCHOR TYPE IS NOT NOTED OR AN ALTERNATE BRAND IS PREFERRED, THE FOLLOWING PRODUCTS ARE ACCEPTABLE TO BE SUBMITTED FOR A SUBSTITUTION REQUEST:

   EXPANSION ANCHORS
   a. HILTI KWIK BOLT TZ (ICC ESR-1917)
   b. SIMPSON STRONG-BOLT-2 (ICC ESR-3037)
   c. POWERS POWER-STUD +SD2 (ICC ESR-2502)
   d. ALTERNATE APPROVED BY THE SEOR
4. ALL CONCRETE ANCHORS WHICH ARE EXPOSED TO THE WEATHER SHALL BE STAINLESS STEEL OR HOT DIP GALVANIZED.

FOUNDATIONS

1. FOUNDATION DESIGN BASED ON THE FOLLOWING GEOTECHNICAL REPORT:
   COMPANY: GEO-ENGINEERING SOLUTIONS, INC.
   DATE: FEBRUARY 1, 2023
   REPORT NUMBER: 72-1467-A
2. DRILLED PIERS ARE DESIGNED BASED ON THE FOLLOWING INFORMATION:
   ALLOWABLE LATERAL BEARING PRESSURE = 350 PCF
   ALLOWABLE SKIN FRICTION = 400 PSF*

   *⅓ ALLOWABLE INCREASE FOR TRANSIENT WIND LOADS
3. DE-WATERING OF EXCAVATIONS FROM EITHER SURFACE WATER, GROUND WATER, OR SEEPAGE SHOULD BE PERFORMED, IF REQUIRED.
4. FOUNDATIONS SHALL BE PLACED AND ESTIMATED ACCORDING TO DEPTHS SHOWN ON DRAWINGS. SHOULD SOIL ENCOUNTERED AT THESE DEPTHS NOT BE APPROVED BY THE INSPECTOR OR SOILS ENGINEER, FOUNDATION ELEVATIONS WILL BE ALTERED.
5. FOOTING BACKFILL AND UTILITY TRENCH BACKFILL SHALL BE MECHANICALLY COMPACTED IN LAYERS IN ACCORDANCE WITH THE SOILS REPORT OR BACKFILLED WITH 2-SACK SAND CEMENT SLURRY AND APPROVED BY THE SPECIAL INSPECTOR. SOILS REPORT SHALL TAKE PRECEDENT WHEN RECOMMENDATION GIVEN.
6. CONTRACTOR SHALL INVESTIGATE SITE DURING CLEARING AND EARTHWORK OPERATIONS FOR FILLED EXCAVATIONS OR BURIED STRUCTURES, SUCH AS CESSPOOLS, CISTERNS, FOUNDATIONS, ETC. IF ANY SUCH STRUCTURES ARE FOUND, STRUCTURAL ENGINEER SHALL BE NOTIFIED IMMEDIATELY.
7. SOIL REMOVAL AND RECOMPACTION SHALL BE PER THE SOILS REPORT AND APPROVED CONTRACT DOCUMENTS.
8. THE DRILLED PIERS MUST BE INSPECTED BY THE SOILS ENGINEER PRIOR TO PLACING CONCRETE AND REINFORCING STEEL. ADJUST SHAFT LENGTHS UNDER DIRECTION OF THE SOILS ENGINEER AND THE OWNER'S REPRESENTATIVE BASED ON SOIL CONDITIONS AT TIME OF DRILLING.
9. PRECAUTIONS SHOULD BE TAKEN DURING THE INSTALLATION OF PIERS TO MINIMIZE THE POSSIBILITY OF CAVING. PIERS SPACED CLOSER 3 PIER DIAMETERS SHOULD BE DRILLED AND FILLED ALTERNATELY, ALLOWING THE CONCRETE TO SET AT LEAST EIGHT HOURS BEFORE DRILLING AN ADJACENT HOLE.
10. PIER EXCAVATIONS SHOULD BE FILLED WITH CONCRETE WITHIN 72 HOURS OR AS NOTED IN THE SOILS REPORT AFTER DRILLING AND INSPECTION, WHICHEVER IS SOONER.
11. KEEP EXCAVATIONS FREE OF WATER BEFORE PLACING CONCRETE UNLESS OTHERWISE APPROVED BY THE SOILS ENGINEER. IF UNABLE TO SEAL OFF WATER FLOW, PER THE APPROVAL OF THE SOILS ENGINEER, ALLOW WATER LEVEL TO ATTAIN ITS NORMAL LEVEL AND PLACE CONCRETE BY THE TREMIE METHOD OR OTHER APPROVED METHOD.
12. PLACE REINFORCING STEEL IN ONE CONTINUOUS UNIT AND ACCURATELY HOLD SECURELY IN FINAL POSITION USING CHAIRS OR SPACERS DURING CONCRETE PLACEMENT.
13. AN UNREINFORCED HEIGHT OF 18 INCHES AT THE BOTTOM OF THE SHAFT IS ACCEPTABLE.
14. CONSTRUCTION SHALL COMPLY WITH THE REQUIREMENTS OF ACI 336.3R, LATEST EDITION.

CONCRETE

1. ALL CONCRETE CONSTRUCTION SHALL CONFORM WITH THE CODE AND WITH THE PROVISIONS OF ACI 318 AND ACI 301.
2. CONCRETE MIXES SHALL BE DESIGNED BY A QUALIFIED TESTING LABORATORY AND APPROVED BY THE STRUCTURAL ENGINEER.
   a. MIX DESIGN METHODS (TEST HISTORY OR TRIAL BATCH METHOD) PER THE CODE SHALL BE USED TO PROPORTION CONCRETE. SUBMIT MIX DESIGN METHOD DATA
   b. MIX DESIGNS SHALL SATISFY EITHER THE SHRINKAGE CRITERIA OR THE W/C RATIO AND TOTAL WATER CRITERIA.
3. SCHEDULE OF STRUCTURAL CONCRETE PERFORMANCE REQUIREMENTS:

MINIMUM CONCRETE PROPERTIES			
ELEMENT	f'c @ 28 DAYS [PSI]	MAX W/C	MAX DENSITY [PCF]
24" DIAM. PIER FOUNDATIONS	5,000	0.50	150
EQUIPMENT PADS & MISC.	3,000	0.50	150

4. PORTLAND CEMENT SHALL CONFORM TO ASTM C-150 TYPE II
5. AGGREGATE FOR HARDROCK CONCRETE SHALL CONFORM TO ALL REQUIREMENTS AND TESTS OFASTM C33 AND PROJECT SPECIFICATIONS. EXCEPTIONS MAY BE USED ONLY WITH PERMISSION OF THE STRUCTURAL ENGINEER.
6. CONCRETE MIXING OPERATION, ETC. SHALL CONFORM TO ASTM C94.
7. PLACEMENT OF CONCRETE SHALL CONFORM TO ACI 301 AND PROJECT SPECIFICATIONS. CLEAN AND ROUGHEN TO MIN. ¼" AMPLITUDE ALL CONCRETE SURFACES AGAINST WHICH NEW CONCRETE IS TO BE PLACED.
8. ALL REINFORCING BARS, ANCHOR BOLTS, AND OTHER CONCRETE INSERTS SHALL BE WELL SECURED IN POSITION PRIOR TO PLACING CONCRETE.
9. PIPES OR CONDUITS LARGER THAN 4" DIAMETER SHALL NOT BE EMBEDDED IN STRUCTURAL CONCRETE EXCEPT WHERE SPECIFICALLY PERMITTED OR APPROVED BY STRUCTURAL ENGINEER. PIPES OR CONDUITS SHALL NOT DISPLACE OR INTERRUPT REINFORCING BARS. SPACE THE PIPES OR CONDUITS SUCH THAT PROPER CONCRETE PLACEMENT AND CONSOLIDATION IS ACHIEVED.
10. PROVIDE MIN. ¾" CHAMFER ON ALL EXPOSED CORNERS.
11. THE STEEL STRUCTURES MAY BE INSTALLED 48 HOURS AFTER THE FOUNDATIONS HAVE BEEN CAST OR AFTER CONCRETE REACHES A MINIMUM COMPRESSIVE STRENGTH OF 1,500-PSI,WHICHEVER COMES FIRST. BREAK TESTS NOT REQUIRED IF WAITING UNTIL 48 HOURS TO ERECT STEEL.

REINFORCING STEEL

1. REINFORCING BARS SHALL CONFORM TO THE REQUIREMENTS OF CHAPTER 19 OF THE CODE, ASTM A615 (A706 WHERE NOTED ON PLANS), GRADE 60 U.N.O.
2. BARS SHALL BE CLEAN OF RUST, GREASE, OR OTHER MATERIALS LIKELY TO IMPAIR BOND. ALL REINFORCING BAR BENDS SHALL BE MADE COLD.
3. REINFORCING BAR SPLICES SHALL, IN CONCRETE, CONFORM TO THE PROVISIONS OF ACI 318. LAP ALL HORIZONTAL BARS AT CORNERS AND INTERSECTIONS.
4. BARS IN SLABS SHALL BE SECURELY SUPPORTED ON WELL-CURED CONCRETE BLOCKS OR APPROVED METAL CHAIRS, PRIOR TO PLACING CONCRETE.
5. REINFORCING STEEL SHALL BE DETAILED IN ACCORDANCE WITH ACI 315.
6. COMPLETE AND DETAILED REINFORCING PLACEMENT DRAWINGS SHALL BE PREPARED AND SUBMITTED FOR REVIEW BY THE STRUCTURAL ENGINEER PRIOR TO FABRICATION IN ACCORDANCE WITH SPECIFICATIONS AND APPLICABLE CODES. THE APPROVED DRAWINGS SHALL BE AVAILABLE ON THE JOB SITE PRIOR TO PLACING OF CONCRETE.
7. REBAR SPACINGS GIVEN ARE MAXIMUM ON CENTER WHETHER STATED AS "O.C." OR NOT. UNLESS A SPECIFIED LENGTH IS GIVEN, ALL REBAR IS CONTINUOUS WHETHER STATED AS "CONT." OR NOT.
8. MECHANICAL BAR SPLICES (COUPLERS) SHALL BE USED WHERE SPECIFIED ON PLANS. THEY MAY ALSO BE USED AT THE CONTRACTOR'S OPTION IN LIEU OF LAP SPLICES AND WHERE REINFORCING IS SHOWN CONTINUOUS THROUGH CONSTRUCTION JOINTS. UNLESS NOTED OTHERWISE, ALL MECHANICAL BAR SPLICES SHALL BE "TYPE 2" AS DEFINED BY ACI 318.
9. COUPLERS SHALL BE AND BE LENTON A2 SERIES MECHANICAL SPLICES (IAPMO ER-0129), OR EQUIVALENT, AND INSTALLED PER THE MANUFACTURER'S RECOMMENDATIONS.
9. CONTINUOUS INSPECTION OF CONCRETE SHALL INCLUDE INSPECTION DURING INSTALLATION OF REINFORCING STEEL. INSPECTION SHALL BE SCHEDULED SO THAT PLACEMENT OF REINFORCING STEEL, CONDUIT, SLEEVES, AND EMBEDDED ITEMS, MAY BE CORRECTED PRIOR TO THE SCHEDULED POUR
10. CONCRETE PROTECTION FOR REINFORCEMENT:
    a. CAST-IN-PLACE CONCRETE. THE FOLLOWING MINIMUM CONCRETE COVER SHALL BE PROVIDED FOR REINFORCEMENT:

MINIMUM CONCRETE COVER		
ELEMENT	COVER	TOLERANCE (+/-)
PERMANENTLY CAST AGAINST OR PERMANENTLY EXPOSED TO EARTH	3"	⅜"
EXPOSED TO EARTH OR WEATHER		
a) #6 THROUGH #18 BAR	2"	⅜"
b) #5 BAR OR SMALLER	1½"	⅜"
NOT EXPOSED TO WEATHER OR CAST AGAINST GROUND	¾"	¼"

SUBMITTALS

1. THE STRUCTURAL SHOP DRAWING REVIEW IS INTENDED TO HELP THE ENGINEER VERIFY THE DESIGN CONCEPT. IT IS THE CONTRACTOR'S RESPONSIBILITY TO CHECK THEIR OWN SHOP DRAWINGS.
2. THE STRUCTURAL SHOP DRAWINGS WILL BE RETURNED FOR RESUBMITTAL IF A CURSORY REVIEW SHOWS MAJOR ERRORS WHICH SHOULD HAVE BEEN FOUND BY THE CONTRACTOR'S CHECKING.
3. THE FOLLOWING SHOP DRAWINGS ARE NOT REQUIRED FOR SUBMITTAL FOR STRUCTURAL REVIEW:
   a. SHORING AND BRACING.
   b. UNSPLICED REBAR AT SLAB-ON-GRADE AND SPREAD FOOTINGS.
   c. FORMWORK.
   d. STRUCTURAL STEEL MILL REPORTS.
4. THE FOLLOWING SHOP DRAWINGS (AND CALCULATIONS WHEN APPLICABLE) ARE REQUIRED FOR SUBMITTAL FOR STRUCTURAL REVIEW:
   a. CONCRETE MIX DESIGNS, INCLUDING STRENGTH TEST RESULTS
   b. REINFORCING STEEL (EXCEPT WHERE NOTED BY NOTE 3 ABOVE)
   c. STRUCTURAL STEEL
   d. ANCHOR ROD CUT SHEET WITH DIAMETER, LENGTH, AND MATERIAL STRENGTH
   e. WELDING PROCEDURE SPECIFICATIONS
5. ANY SUBMITTAL OF A DETAIL SHEET WITH ADDED INFORMATION NOT SHOWN ON PLANS SHALL BE ACCOMPANIED BY LOCATION PLAN IDENTIFYING THE MEMBERS INVOLVED AND CLOUDING AROUND ADDED INFORMATION.
6. THE SHOP DRAWINGS SHALL REFERENCE THE DATA OF THE DESIGN USED TO PRODUCE THE SUBMITTAL.
7. CONTRACTOR/SUBCONTRACTOR TO PROVIDE DIGITAL SET OF SHOP DRAWINGS FOR REVIEW BY THE STRUCTURAL ENGINEER. DIGITAL SET WILL BE RETURNED TO THE CONTRACTOR FOR DISTRIBUTION.

COLD FORMED STEEL

1. ALL COLD-FORMED METAL FRAMING CONSTRUCTION SHALL BE IN ACCORDANCE WITH AISI S100 "SPECIFICATIONS FOR DESIGN OF COLD-FORMED STEEL STRUCTURAL MEMBERS".
2. ALL COLD-FORMED STEEL SHALL CONFORM TO THE FOLLOWING (U.N.O):

43 MIL / 18GA AND LIGHTER	ASTM A1003, GR 33 OR ASTM 653, GR 33
54 MIL / 16 GA AND HEAVIER	ASTM A1003, GR 55 OR ASTM 653, GR 55 MIN. Fy = 55 ksi, MIN. Fu = 70 ksi

3. ALL COLD-FORMED STEEL SHALL HAVE A MINIMUM COATING PROTECTION G90.
4. WELDING IS NOT PERMITTED UNLESS SPECIFICALLY APPROVED BY THE SEOR.
5. ALL APPROVED WELDING SHALL BE PERFORMED BY WELDERS CERTIFIED FOR ALL APPROPRIATE DIRECTIONS COMPLYING WITH AWS D1.3. WELDING RODS SHALL CONFORM TO THE FOLLOWING:

43 MIL / 18GA AND LIGHTER	E60XX
54 MIL / 16 GA AND HEVIER	E70XX OR E6013
COLD FORMED TO STRUCTURAL STEEL	E70XX LOW HYDROGEN

6. WIRE TYING OF FRAMING COMPONENTS SHALL NOT BE PERMITTED.
7. TEMPORARY BRACING REQUIREMENTS ARE THE RESPONSIBILITY OF THE CONTRACTOR.
8. ALL SCREWS SHALL BE FULLY DRIVEN AND PROTRUDE THE LARGER OF 3 THREADS OR 1/4" THROUGH THE LAST MATERIAL JOINED. THERE SHALL BE NO SPACE BETWEEN JOINING MEMBERS AT THE SCREW LOCATION.
9. ALL FIELD CUTTING OF MEMBERS SHALL BE BY SAWING OR SHEARING. TORCH OR PLASMA CUTTING OF MEMBERS SHALL NOT BE PERMITTED.
10. ALL FRAMING COMPONENTS SHALL BE CUT SQUARELY FOR ATTACHMENT TO PERPENDICULAR MEMBERS OR AS REQUIRED ON AN ANGULAR FIT AGAINST ABUTTING MEMBERS. MEMBERS SHALL BE HELD POSITIVELY IN PLACE UNTIL PROPERLY FASTENED.
11. SPLICING OF PURLINS OR OTHER LOAD CARRYING MEMBERS SHALL NOT BE PERMITTED UNLESS SPECIFICALLY APPROVED BY THE ENGINEER OF RECORD.
12. WHEN CLIP ANGLES WITH SCREW CONNECTIONS ARE USED TO ATTACH A COMPONENT TO THE PRIMARY STRUCTURE, THE CLIP ANGLE SHALL BE FASTENED TO THE PRIMARY STRUCTURE FIRST; THEN THE COMPONENT SHALL BE BROUGHT TO BEAR ON THE STRUCTURE AND FASTENED TO THE CLIP ANGLE.
13. MEMBERS SHALL BE IDENTIFIED PER SECTION 2203.1 OF THE CBC PART 2, VOL. 2.
14. ALL EXTERIOR SCREWS SHALL BE ELCO DRIL-FLEX (ICC ESR-3332) OR ITW BUILDEX TEKS SELECT (ICC ESR-3223) UNLESS APPROVED BY THE SEOR.

STRUCTURAL INSPECTION AND TESTING

THE FOLLOWING ELEMENTS OF CONSTRUCTION SHALL REQUIRE SPECIAL INSPECTION PER CHAPTER 17 OF THE CODE. U.N.O.

SPECIAL INSPECTIONS AND TESTING SHALL BE PROVIDED BY AN INSPECTION AGENCY, EMPLOYED BY THE OWNER, AND QUALIFIED BY THE BUILDING OFFICIAL TO INSPECT THE PARTICULAR TYPE OF CONSTRUCTION. TESTS AND INSPECTIONS, AS REQUIRED BY SECTIONS 110 & 1705 OF THE 2016 CBC W/ CALIFORNIA AMENDMENTS, SHALL BE PERFORMED DURING CONSTRUCTION ON THE TYPES OF WORK LISTED BELOW:

TESTING AND INSPECTION		
	INSPECTIONS	TESTING
STEEL CONSTRUCTION	1706.2	1705.13
CONCRETE CONSTRUCTION	1705.3	1705.3
SOILS	1705.6	
CAST IN-PLACE DEEP FOUNDATIONS	1705.8	

1. THE SPECIAL INSPECTIONS IDENTIFIED ON PLANS ARE, IN ADDITION TO, AND NOT A SUBSTITUTE FOR, THOSE INSPECTIONS REQUIRED TO BE PERFORMED BY THE GOVERNING JURISDICTION. SPECIALLY INSPECTED WORK WHICH IS INSTALLED OR COVERED WITHOUT THE APPROVAL OF AN INSPECTOR FROM THE GOVERNING JURISDICTION IS SUBJECT TO REMOVAL OR EXPOSURE.
2. FOR CONTINUOUS INSPECTION, WHEN WORK IN MORE THAN ONE CATEGORY OF WORK REQUIRING SPECIAL INSPECTION IS TO BE PERFORMED SIMULTANEOUSLY, OR THE GEOGRAPHIC LOCATION OF THE WORK IS SUCH THAT IT CANNOT BE CONTINUOUSLY OBSERVED IN ACCORDANCE WITH THE PROVISIONS OF THE CODE, IT IS THE AGENT'S RESPONSIBILITY TO EMPLOY A SUFFICIENT NUMBER OF INSPECTORS TO ASSURE THAT ALL WORK IS INSPECTED IN ACCORDANCE WITH THOSE PROVISIONS.
3. THE SPECIAL INSPECTORS MUST BE CERTIFIED BY THE GOVERNING JURISDICTION IN THE CATEGORY OF WORK REQUIRED TO HAVE SPECIAL INSPECTION. EXCEPTIONS:
   a. SOILS INSPECTIONS BY THE SOILS ENGINEER OF RECORD OR PROJECT INSPECTOR
   b. WHEN WAIVED BY THE GOVERNING JURISDICTION
5. IT IS THE RESPONSIBILITY OF THE CONTRACTOR TO INFORM THE OWNER'S REPRESENTATIVE, SPECIAL INSPECTOR OR INSPECTION AGENCY AT LEAST TWO WORKING DAYS PRIOR TO PERFORMING ANY WORK THAT REQUIRES SPECIAL INSPECTION. ALL WORK PERFORMED WITHOUT REQUIRED SPECIAL INSPECTION IS SUBJECT TO REMOVAL.
6. PROVIDE SPECIAL INSPECTION FOR CONNECTIONS BOLTED WITH A325 AND A490 BOLTS. INSPECTIONS SHALL BE DONE PER APPROVED NATIONALLY RECOGNIZED STANDARDS AND THE REQUIREMENTS OF THE CODE AND THE GOVERNING JURISDICTION. WHILE THE WORK IS IN PROGRESS, THE SPECIAL INSPECTOR SHALL DETERMINE THE BOLTS, NUTS, WASHERS AND PAINT; BOLTED PARTS; AND INSTALLATION AND TIGHTENING MEET THE STANDARDS REQUIREMENTS.
7. THE SPECIAL INSPECTOR FOR HIGH STRENGTH BOLTED CONNECTIONS SHALL:
   a. OBSERVE THE CALIBRATION PROCEDURES WHEN SUCH PROCEDURES ARE REQUIRED BY THE PLANS OR SPECIFICATIONS.
   b. MONITOR THE INSTALLATION OF BOLTS TO DETERMINE THAT ALL PLIES OF CONNECTED MATERIALS HAVE BEEN DRAWN TOGETHER.
   c. MONITOR THAT THE SELECTED PROCEDURE IS PROPERLY USED TO TIGHTEN ALL BOLTS.
8. IF DEEMED NECESSARY, THE SPECIAL INSPECTOR SHALL PROVIDE PROGRESS REPORTS AND A FINAL REPORT TO THE STRUCTURAL ENGINEER.
9. THE SPECIAL INSPECTOR SHALL ENSURE THAT ALL DEFICIENCIES NOTED BY THE STRUCTURAL ENGINEER IN STRUCTURAL OBSERVATION REPORTS ARE CORRECTED. SUCH COMPLIANCE SHALL BE REFERENCED IN SPECIAL INSPECTOR REPORT.
10. THE CONSTRUCTION MATERIALS TESTING LABORATORY MUST BE APPROVED BY THE GOVERNING JURISDICTION, FOR TESTING OF MATERIALS, SYSTEMS, COMPONENTS AND, EQUIPMENTS.
11. PERIODIC INSPECTION SHALL OCCUR FREQUENTLY ENOUGH TO INSPECT ALL OF THE INSTALLED ITEMS AND TO PERIODICALLY WITNESS THE INSTALLATION OF THE ITEMS.

STRUCTURAL STEEL

1. STRUCTURAL STEEL SHALL BE DETAILED, FABRICATED, AND ERECTED IN ACCORDANCE WITH AISC 360 AND AISC 303.
2. ALL STRUCTURAL STEEL SHALL CONFORM TO THE ASTM DESIGNATION AS INDICATED BELOW (U.N.O.):

MINIMUM MATERIAL PROPERTIES	
ELEMENT	ASTM
BASE PLATES & CAP PLATES	A572, GR 50
ALL OTHER PLATES	A36, GR 36 OR DUAL GRADE
WF MATERIAL	A992, GR 50
HSS MATERIAL	A500, GR C
STRUCTURAL PIPES	A53, GR B
HIGH STRENGTH BOLTS	A325
MACHINE BOLTS	A307
ANCHOR BOLTS	F1554, GR 105

3. THE STRUCTURAL STEEL FABRICATOR SHALL FURNISH SHOP DRAWINGS OF ALL STEEL FOR STRUCTURAL ENGINEER'S REVIEW BEFORE FABRICATION.
4. HOLES IN STEEL SHALL BE 1/16" LARGER DIAMETER THAN NOMINAL SIZE OF BOLT USED, EXCEPT AS NOTED. COLUMN BASE PLATE HOLES MAY BE OVERSIZED PER AISC MANUAL OR AS NOTED.
5. ALL STRUCTURAL STEEL SURFACES THAT ARE ENCASED IN CONCRETE, MASONRY, OR SPRAY ON FIREPROOFING, OR ARE ENCASED BY BUILDING FINISH, SHALL BE LEFT UNPAINTED.
6. ALL STRUCTURAL STEEL AND MISCELLANEOUS METAL EXPOSED TO THE WEATHER SHALL BE HOT DIP GALVANIZED OR PAINTED AFTER FABRICATION, U.N.O.
7. GALVANIZING AT FIELD WELDS AND DAMAGE SHALL BE REPAIRED WITH A GALVANIZING REPAIR PAINT ACCORDING TO ASTM A780.
8. TIGHTEN HIGH STRENGTH BOLTS TO "SNUG-TIGHT" CONDITION PER AISC SPECIFICATION FOR STRUCTURAL JOINTS, U.N.O.
9. PROVIDE BEVELED WASHERS PER ANSI B18.23.1 AS REQUIRED ON SLOPED SURFACES.
21. GROUT OTHER SHALL BE NON-SHRINK, NON-METALLIC GROUT, MEETING ASTM C-1107, MIXED AND INSTALLED PER MANUFACTURER'S SPECIFICATIONS.
22. TIGHTEN ANCHOR BOLTS TO "SNUG TIGHT" CONDITION PER AISC SPECIFICATIONS, U.N.O.
23. WELDING:
24. ALL WELDS SHALL BE IN CONFORMITY WITH THE PROJECT SPECIFICATIONS AND AWS D1.1. SEE SPECIAL INSPECTION SECTION FOR WELDING INSPECTION REQUIREMENTS.
    a. ALL WELDING IS TO BE DONE BY CERTIFIED WELDERS USING E70XX ELECTRODES (U.N.O.).
    b. WELD LENGTHS CALLED FOR ON PLANS ARE THE NET EFFECTIVE LENGTH REQUIRED. WHERE FILLET WELD SYMBOL IS GIVEN WITHOUT INDICATION OF SIZE, USE MINIMUM SIZE WELDS AS SPECIFIED IN AISC 360.
    c. WELDS TERMINATING AT ENDS OR SIDES, WHERE PRACTICAL, SHALL BE RETURNED CONTINUOUSLY AROUND CORNERS A DISTANCE 2 TIMES THE NOMINAL SIZE OF THE WELD PER AISC 360 SECTION J2.2B, U.N.O.
    d. ALL FULL-PENETRATION FIELD WELDS SHALL BE ULTRASONICALLY TESTED.
    e. ALL TWO-SIDED FILLET WELDS SHOWN SHALL BE WELDED WITH THE SAME (GIVEN) WELD SIZE ON BOTH SIDES.
    f. ALL UNSIZED GROOVE OR BUTT WELDS SHOWN SHALL BE COMPLETE PENETRATION.
    g. ALL PROVISIONS OF AWS SHALL BE OBSERVED INCLUDING REQUIREMENTS FOR BACK-UP PLATES AND WELD TRANSITIONS WHETHER OR NOT THEY ARE SPECIFICALLY SHOWN.
    h. A WRITTEN WELDING PROCEDURE SPECIFICATION SHALL BE SUBMITTED TO THE TESTING LABORATORY. IT SHALL INCLUDE ALL WELDING PROCEDURES TO BE USED AS DESCRIBED IN AWS, CHAPTER 4.
    i. WHERE FIELD WELDING IS INDICATED, THE FIELD DESIGNATION IS GIVEN AS A RECOMMENDATION ONLY.

SYSTEM HOST
MALAGA COUNTY WATER DISTRICT
SERVING HOME AND INDUSTRY
3580 S. FRANK ST
FRESNO, CA 93725
559-485-7353

SYSTEM DEVELOPER
sitelogiQ
1512 SILICA AVE
SACRAMENTO, CA 95815
916-988-8808

ELECTRICAL CONSTRUCTORS AND ENGINEERS
BLYMYER ENGINEERS
1101 MARINA VILLAGE PKWY
ALAMEDA, CA 94501
510-521-3773

STRUCTURAL ENGINEERING AND STEEL CONSTRUCT
TEICHERT SOLAR
10620 TREENA STREET, STE 140
SAN DIEGO, CA 92131
562-283-2970

ARCHITECT OF RECORD
M M P V d e s i g n
Mariana Moncada, Architect
718 West Arbor Drive
San Diego, CA 92103
619.632.2883

ARCHITECT / ENGINEER OF RECORD

PROJECT
MALAGA CWD - WATER TREATMENT PLANT

3749 S MAPLE AVE
FRESNO, CA 93725

NO.	REVISION	DATE

DATE: 07.14.23

SHEET TITLE
GENERAL STRUCTURAL NOTES

SHEET NO.:
S100

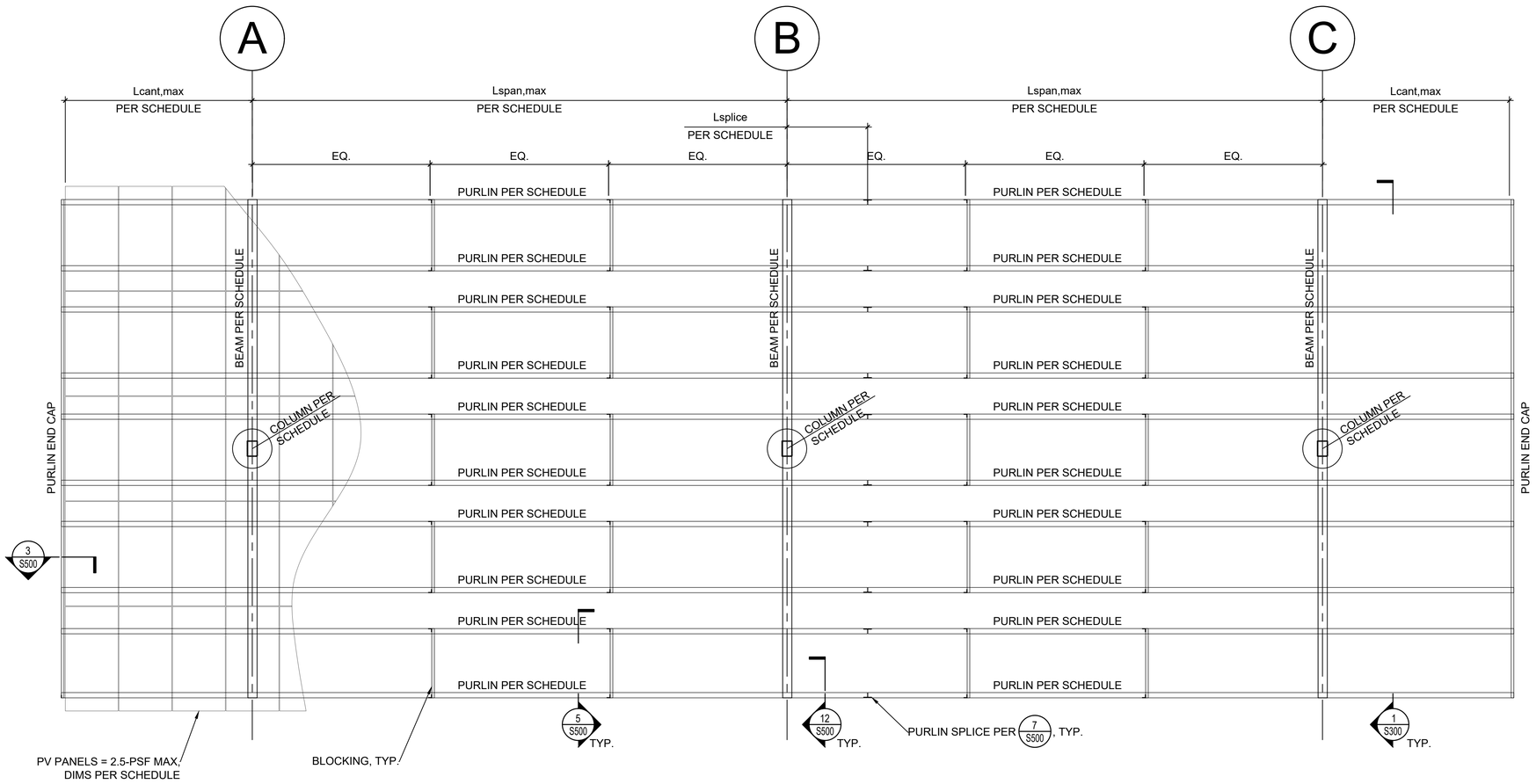

1 FRAMING PLAN

SCALE: ¼" = 1'-0"

MEMBER & DIMENSIONAL SCHEDULE

ARRAY	ARRAY SIZE	# OF COLUMNS	COLUMN	BEAM	PURLIN	PANEL LENGTH	PANEL WIDTH	SPAN LENGTH, Lspan	CANT. LENGTH, Lcant	SPLICE LENGTH, Lsplice	MAX. COLUMN LENGTH	MIN. CLEARANCE
C	5X27	3	HSS12x8x5/16	W14x43	12X4X14GA	89.2"	44.6"	37'-6"	13'-1 5/16"	5'-7 5/16"	13'-6"	13'-6"

2 SCHEDULE

NO SCALE

SYSTEM HOST

MALAGA COUNTY WATER DISTRICT
SERVING HOME AND INDUSTRY

3580 S. FRANK ST
FRESNO, CA 93725
559-485-7353

SYSTEM DEVELOPER

sitelogiQ

1512 SILICA AVE
SACRAMENTO, CA 95815
916-988-8808

ELECTRICAL CONSTRUCTORS AND ENGINEERS

BLYMYER ENGINEERS

1101 MARINA VILLAGE PKWY
ALAMEDA, CA 94501
510-521-3773

STRUCTURAL ENGINEERING AND STEEL CONSTRUCT

TEICHERT SOLAR

10620 TREENA STREET, STE 140
SAN DIEGO, CA 92131
562-283-2970

ARCHITECT OF RECORD

M M P V d e s i g n

Mariana Moncada, Architect
718 West Arbor Drive
San Diego, CA 92103
619.632.2883

ARCHITECT / ENGINEER OF RECORD

PROJECT

MALAGA CWD - WATER TREATMENT PLANT

3749 S MAPLE AVE
FRESNO, CA 93725

NO.	REVISION	DATE

DATE: 07.14.23

SHEET TITLE

FRAMING PLAN & SCHEDULE

SHEET NO.:

S200

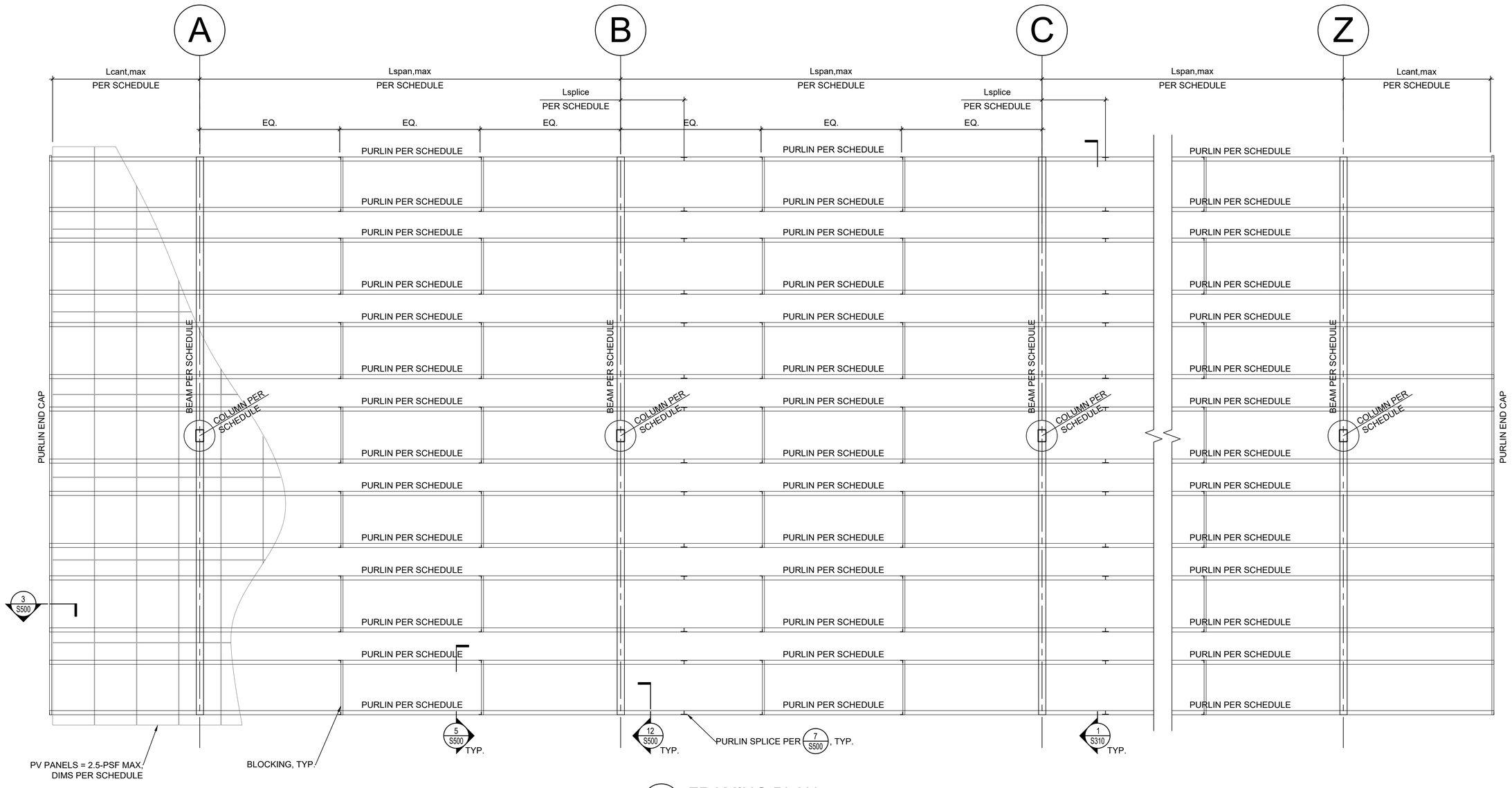

1 FRAMING PLAN

SCALE: ¼" = 1'-0"

MEMBER & DIMENSIONAL SCHEDULE												
ARRAY	ARRAY SIZE	# OF COLUMNS	COLUMN	BEAM	PURLIN	PANEL LENGTH	PANEL WIDTH	SPAN LENGTH, Lspan	CANT. LENGTH, Lcant	SPLICE LENGTH, Lsplice	MAX. COLUMN LENGTH	MIN. CLEARANCE
A, B	7X37	4	HSS12x8x$\frac{5}{16}$	W14x43	12X4X14GA	89.2"	44.6"	37'-6"	13'-1 5/16"	5'-7 5/16"	13'-6"	13'-6"

2 SCHEDULE

NO SCALE

SYSTEM HOST

MALAGA COUNTY WATER DISTRICT
SERVING HOME AND INDUSTRY

3580 S. FRANK ST
FRESNO, CA 93725
559-485-7353

SYSTEM DEVELOPER

sitelogiQ

1512 SILICA AVE
SACRAMENTO, CA 95815
916-988-8808

ELECTRICAL CONSTRUCTORS AND ENGINEERS

BLYMYER ENGINEERS

1101 MARINA VILLAGE PKWY
ALAMEDA, CA 94501
510-521-3773

STRUCTURAL ENGINEERING AND STEEL CONSTRUCT

TEICHERT SOLAR

10620 TREENA STREET, STE 140
SAN DIEGO, CA 92131
562-283-2970

ARCHITECT OF RECORD

M M P V d e s i g n

Mariana Moncada, Architect
718 West Arbor Drive
San Diego, CA 92103
619.632.2883

ARCHITECT / ENGINEER OF RECORD

PROJECT

MALAGA CWD - WATER TREATMENT PLANT

3749 S MAPLE AVE
FRESNO, CA 93725

NO.	REVISION	DATE

DATE: 07.14.23

SHEET TITLE

FRAMING PLAN & SCHEDULE

SHEET NO.:

S210

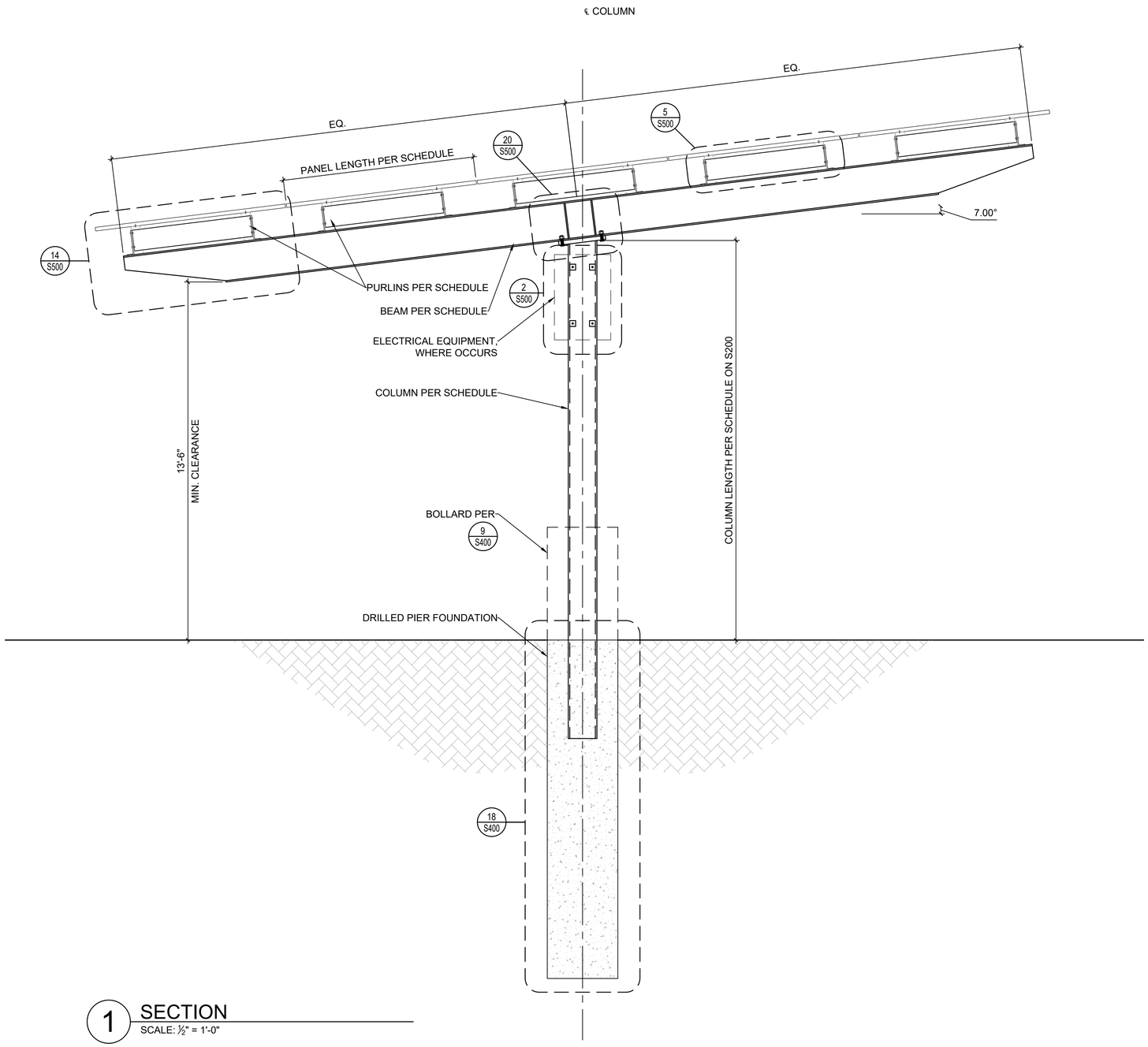

1 SECTION
SCALE: ½" = 1'-0"

SYSTEM HOST

MALAGA COUNTY WATER DISTRICT
SERVING HOME AND INDUSTRY

3580 S. FRANK ST
FRESNO, CA 93725
559-485-7353

SYSTEM DEVELOPER

sitelogiQ

1512 SILICA AVE
SACRAMENTO, CA 95815
916-988-8808

ELECTRICAL CONSTRUCTORS AND ENGINEERS

BLYMYER ENGINEERS

1101 MARINA VILLAGE PKWY
ALAMEDA, CA 94501
510-521-3773

STRUCTURAL ENGINEERING AND STEEL CONSTRUCT

TEICHERT SOLAR

10620 TREENA STREET, STE 140
SAN DIEGO, CA 92131
562-283-2970

ARCHITECT OF RECORD

M M P V d e s i g n

Mariana Moncada, Architect
718 West Arbor Drive
San Diego, CA 92103
619.632.2883

ARCHITECT / ENGINEER OF RECORD

PROJECT

MALAGA CWD - WATER TREATMENT PLANT

3749 S MAPLE AVE
FRESNO, CA 93725

NO.	REVISION	DATE

DATE:
07.14.23

SHEET TITLE

SECTION - 5X

SHEET NO.:

S300

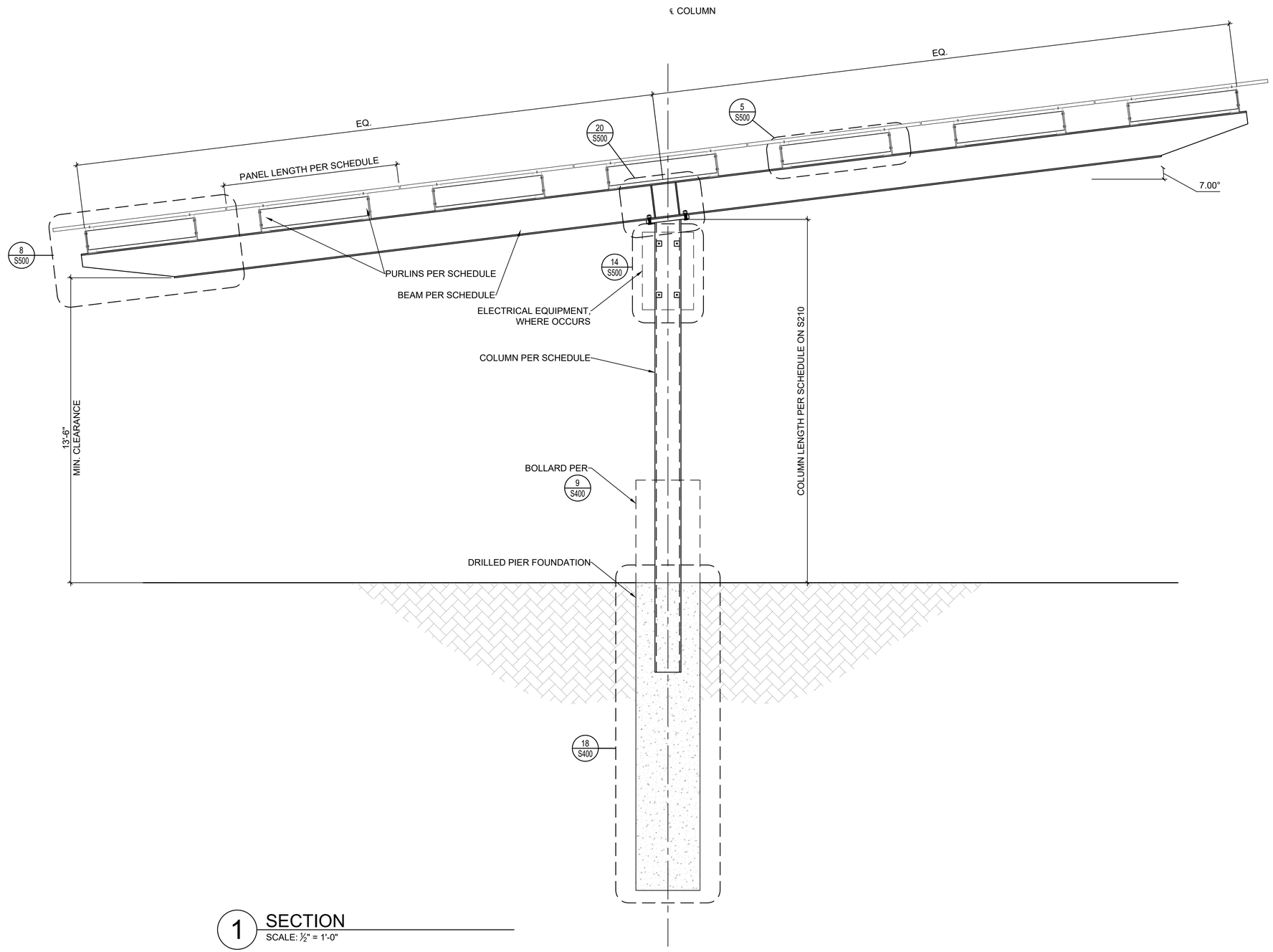

1 SECTION
SCALE: ½" = 1'-0"

SYSTEM HOST

3580 S. FRANK ST
FRESNO, CA 93725
559-485-7353

SYSTEM DEVELOPER

1512 SILICA AVE
SACRAMENTO, CA 95815
916-988-8808

ELECTRICAL CONSTRUCTORS AND ENGINEERS

1101 MARINA VILLAGE PKWY
ALAMEDA, CA 94501
510-521-3773

STRUCTURAL ENGINEERING AND STEEL CONSTRUCT

10620 TREENA STREET, STE 140
SAN DIEGO, CA 92131
562-283-2970

ARCHITECT OF RECORD

M M P V d e s i g n

Mariana Moncada, Architect
718 West Arbor Drive
San Diego, CA 92103
619.632.2883

ARCHITECT / ENGINEER OF RECORD

PROJECT

MALAGA CWD - WATER TREATMENT PLANT

3749 S MAPLE AVE
FRESNO, CA 93725

NO.	REVISION	DATE

DATE:
07.14.23

SHEET TITLE

SECTION - 7X

SHEET NO.:

S300

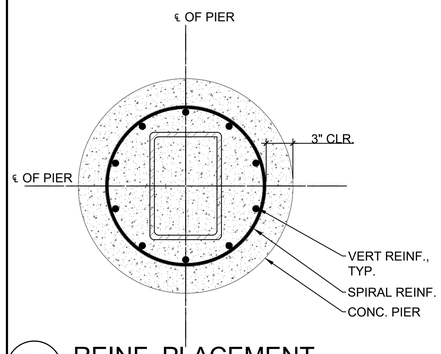

8 REINF. PLACEMENT
SCALE: 3" = 1'-0"

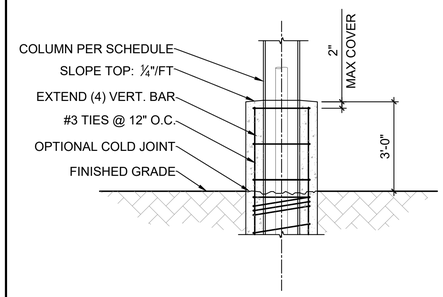

9 BOLLARD DETAIL
SCALE: ½" = 1'-0"

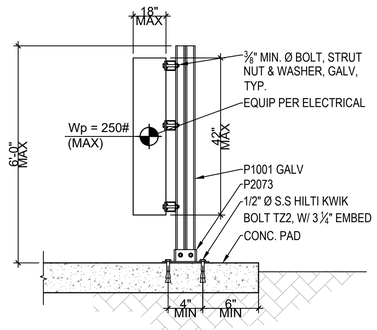

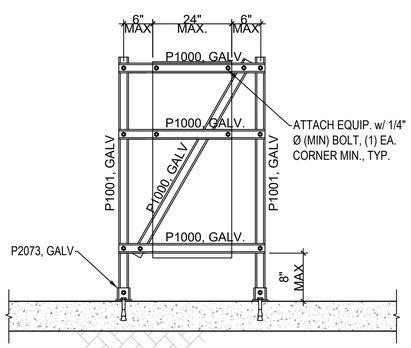

17 EQUIPMENT RACK
SCALE: 1" = 1'-0"

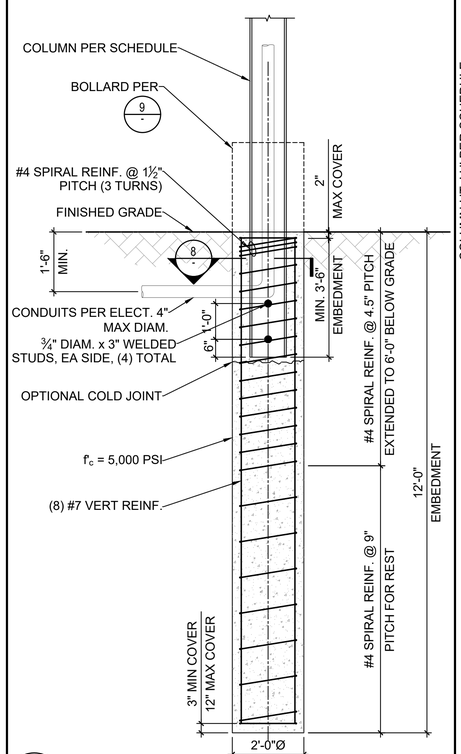

18 PIER FOUNDATION
SCALE: ½" = 1'-0"

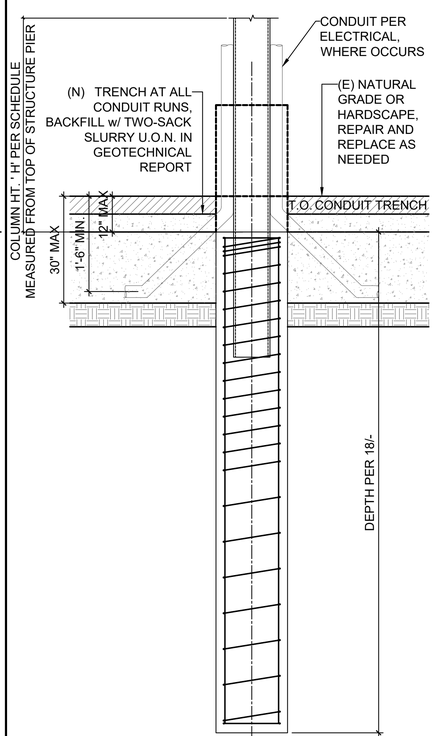

19 CONDUIT ROUTING
SCALE: ½" = 1'-0"

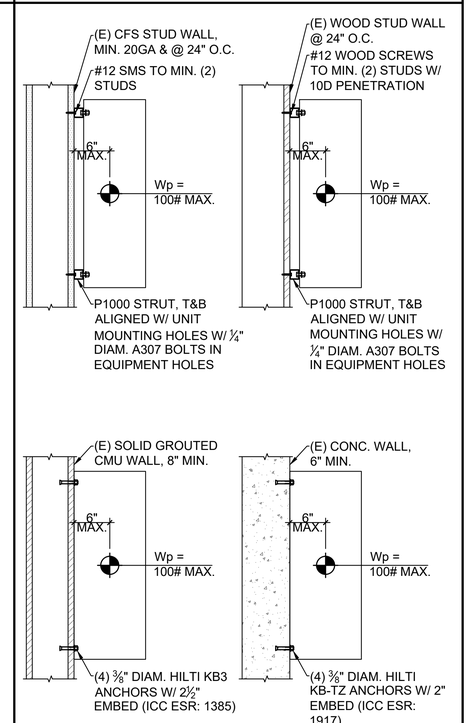

20 WALL MOUNTED EQUIPMENT
SCALE: ½" = 1'-0"

SYSTEM HOST
MALAGA COUNTY WATER DISTRICT
SERVING HOME AND INDUSTRY
3580 S. FRANK ST
FRESNO, CA 93725
559-485-7353

SYSTEM DEVELOPER
sitelogiQ
1512 SILICA AVE
SACRAMENTO, CA 95815
916-988-8808

ELECTRICAL CONSTRUCTORS AND ENGINEERS
BLYMYER ENGINEERS
1101 MARINA VILLAGE PKWY
ALAMEDA, CA 94501
510-521-3773

STRUCTURAL ENGINEERING AND STEEL CONSTRUCT
TEICHERT SOLAR
10620 TREENA STREET, STE 140
SAN DIEGO, CA 92131
562-283-2970

ARCHITECT OF RECORD
M M P V d e s i g n
Mariana Moncada, Architect
718 West Arbor Drive
San Diego, CA 92103
619.632.2883

ARCHITECT / ENGINEER OF RECORD

PROJECT
MALAGA CWD - WATER TREATMENT PLANT

3749 S MAPLE AVE
FRESNO, CA 93725

NO.	REVISION	DATE

DATE: 07.14.23

SHEET TITLE
FOUNDATION & ANCHORAGE DETAILS

SHEET NO.:
S400

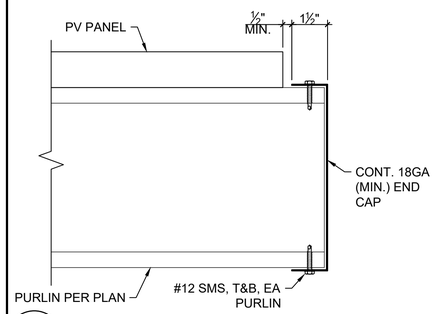

3 END CAP CONN. DETAIL
SCALE: 3" = 1'-0"

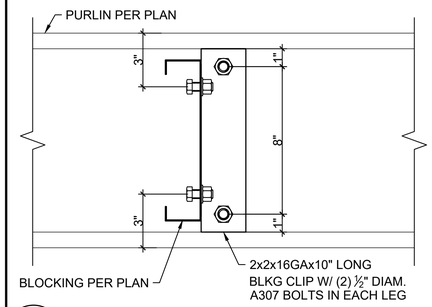

4 BLOCKING TO PURLIN CONN.
SCALE: 3" = 1'-0"

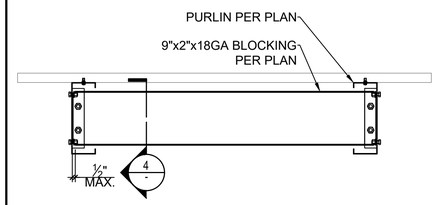

5 PURLIN BLOCKING
SCALE: ½" = 1'-0"

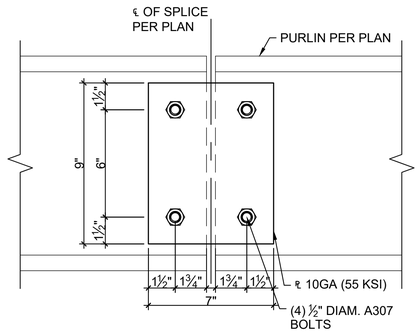

7 PURLIN SPLICE
SCALE: 3" = 1'-0"

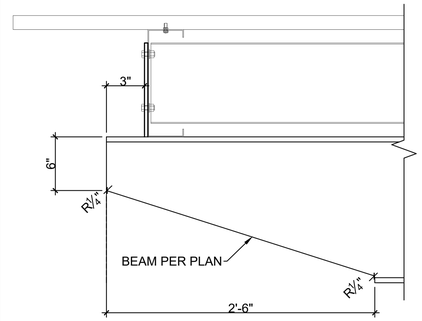

8 BEAM END DETAIL
SCALE: 1½" = 1'-0"

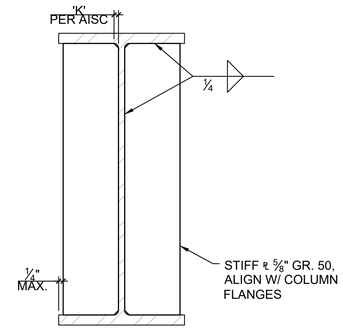

10 STIFFENER PLATE
SCALE: 3" = 1'-0"

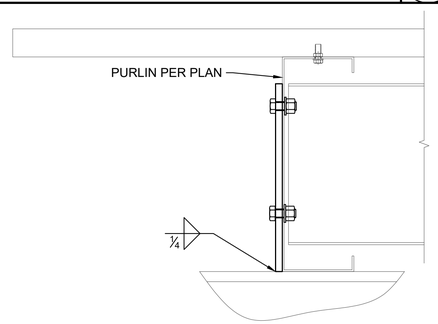

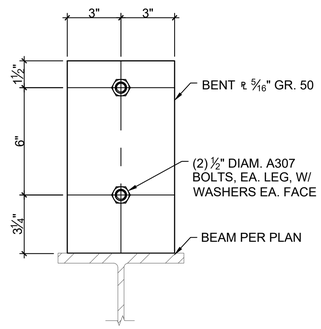

12 BEAM TO PURLIN CONN.
SCALE: 3" = 1'-0"

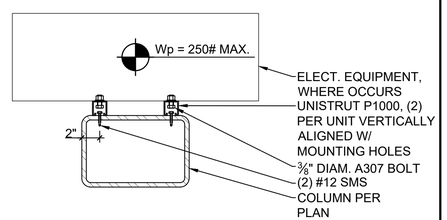

14 EQUIPMENT MOUNTING
SCALE: 1½" = 1'-0"

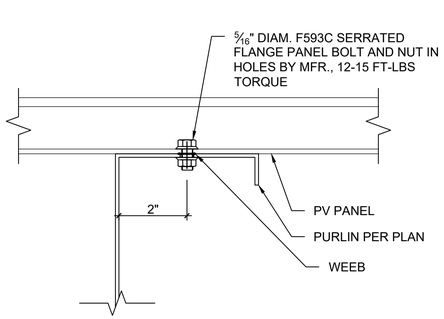

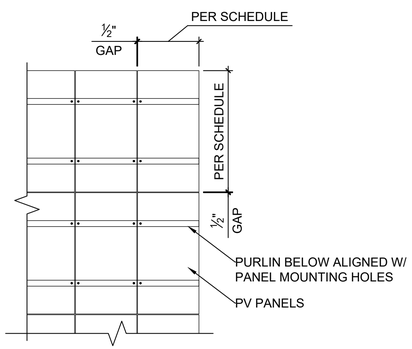

17 PV PANEL ATTACHMENT
SCALE: 6" = 1'-0"

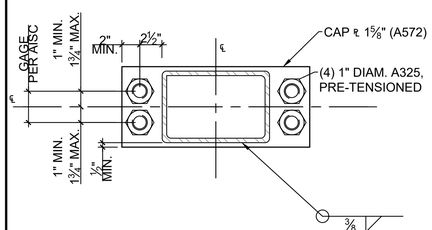

19 CAP PLATE
SCALE: 1½" = 1'-0"

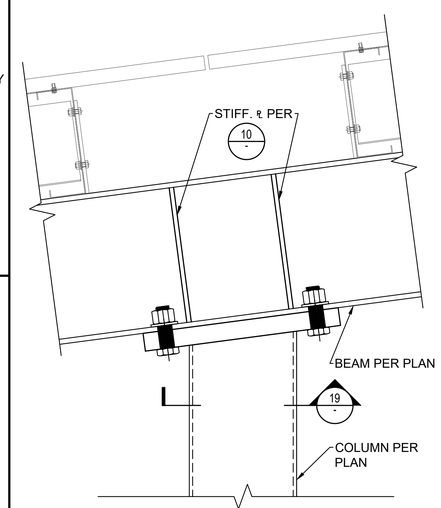

20 BEAM TO COLUMN CONN.
SCALE: 1½" = 1'-0"

SYSTEM HOST

MALAGA COUNTY WATER DISTRICT — SERVING HOME AND INDUSTRY

3580 S. FRANK ST
FRESNO, CA 93725
559-485-7353

SYSTEM DEVELOPER

sitelogiQ

1512 SILICA AVE
SACRAMENTO, CA 95815
916-988-8808

ELECTRICAL CONSTRUCTORS AND ENGINEERS

BLYMYER ENGINEERS

1101 MARINA VILLAGE PKWY
ALAMEDA, CA 94501
510-521-3773

STRUCTURAL ENGINEERING AND STEEL CONSTRUCT

TEICHERT SOLAR

10620 TREENA STREET, STE 140
SAN DIEGO, CA 92131
562-283-2970

ARCHITECT OF RECORD

M M P V d e s i g n

Mariana Moncada, Architect
718 West Arbor Drive
San Diego, CA 92103
619.632.2883

ARCHITECT / ENGINEER OF RECORD

PROJECT

MALAGA CWD - WATER TREATMENT PLANT

3749 S MAPLE AVE
FRESNO, CA 93725

NO.	REVISION	DATE

DATE: 07.14.23

SHEET TITLE

STEEL DETAILS

SHEET NO.:

S500

GENERAL NOTES

1. AT ALL TIMES THE CONTRACTOR WILL BE SOLELY AND COMPLETELY RESPONSIBLE FOR CONDITION OF JOB SITE, INCLUDING THE SAFETY OF ALL PERSONS AND PROPERTY AND FOR ALL NECESSARY INDEPENDENT ENGINEERING REVIEWS OF THESE CONDITIONS. THE ENGINEERS JOB SITE REVIEW IS NOT INTENDED TO INCLUDE REVIEW OF THE ADEQUACY OF THE CONTRACTORS SAFETY MEASURES.
2. THE CONTRACTOR SHALL MAKE AN EXAMINATION OF THE SITE AND COMPARE THE SITE WITH THE DRAWINGS AND SPECIFICATIONS AND SATISFY HIMSELF AS TO CONDITIONS UNDER WHICH WORK IS TO BE PERFORMED. THE CONTRACTOR SHALL ASCERTAIN AND CHECK THE LOCATIONS OF ANY EXISTING STRUCTURES OR EQUIPMENT WHICH MAY AFFECT WORK THAT HAS TO BE PERFORMED, NO ALLOWANCE SHALL SUBSEQUENTLY BE MADE IN CONTRACTOR'S BEHALF FOR ANY EXPENSE TO WHICH THE CONTRACTOR MAY BE PUT DUE TO FAILURE OR NEGLECT BY CONTRACTOR TO MAKE SUCH EXAMINATION.
3. ALL WORK SHALL BE COORDINATED WITH THE OWNER TO MAINTAIN CONTINUITY OF SERVICE AND MAXIMUM UTILIZATION OF THE OWNERS FACILITY.
4. THE CURRENT ISSUE OF ALL NFPA, IBC, IFC, ANSI, OSHA, ASTM, NEMA, AND OTHER NATIONALLY PUBLISHED CODES OR STANDARDS SHALL APPLY TO THIS WORK UNLESS LOCAL JURISDICTION SUPERSEDES. THE MOST STRINGENT CODES SHALL APPLY.
5. NOTHING IN THE DRAWINGS OR SPECIFICATIONS IS INTENDED TO ALLOW A VIOLATION OF ELECTRICAL WORKING SPACE AROUND ELECTRICAL EQUIPMENT REQUIREMENT. ANY DEVIATION FROM THIS REQUIREMENT SHALL BE APPROVED IN WRITING, BY THE ENGINEER. THE CONTRACTOR SHALL RELOCATE ANY EQUIPMENT IN VIOLATION OF THE ELECTRICAL CODE AT HIS OWN COST.
6. PROVIDE PHENOLIC NAMEPLATE WITH WHITE LETTERING ON BLACK BACKGROUND FOR EACH ELECTRICAL EQUIPMENT. PROVIDE PERMANENT MEANS OF ATTACHMENT THAT WILL NOT VIOLATE NEMA RATING OR EQUIPMENT WARRANTY.
7. REFER TO THE DRAWINGS FOR LOCATIONS AND SPACE REQUIREMENTS OF ELECTRICAL EQUIPMENT. COORDINATE THE INSTALLATION OF ELECTRICAL EQUIPMENT WITH OTHER TRADES.
8. POWER FEEDERS MAY NOT BE SHOWN ON THE DRAWINGS. REFER TO THE SINGLE LINE DIAGRAM FOR FEEDER INFORMATION.
9. CONTRACTOR SHALL SECURE AND PAY FOR ELECTRICAL TRADE SPECIFIC CONSTRUCTION PERMITS, LICENSES, GOVERNMENTAL AND INSPECTION FEES NECESSARY FOR THE EXECUTION OF THE WORK, UNLESS OTHERWISE DIRECTED.
10. ELECTRICAL CONTRACTOR SHALL PROVIDE COMPLETE ELECTRICAL INSTALLATION IN ACCORDANCE WITH ESTABLISHED TECHNIQUES AND ACCEPTED PRACTICES AND ALL LOCAL, STATE, AND NATIONAL CODES HAVING JURISDICTION.
11. ELECTRICAL REQUIREMENTS SUCH AS CONDUIT ROUTING AND LOCATIONS OF ELECTRICAL DEVICES (RECEPTACLES, SWITCHES, FLOOR OUTLETS, CONDUIT STUBS, ETC.) SHOWN ON THESE PLANS ARE DIAGRAMMATIC AND SUBJECT TO VERIFICATION BY ELECTRICAL CONTRACTOR FOR THE INTERFACING OF THE ELECTRICAL WORK WITH THE INSTALLATION. CONTRACTOR SHALL MAKE FIELD ADJUSTMENTS TO CLEAR THE OTHER FACILITIES EXCEPT AS SHOWN DIMENSIONED ON THE ARCHITECTURAL DRAWINGS OR AS APPROVED BY THE ARCHITECT.
12. ELECTRICAL EQUIPMENT SHOWN OR SPECIFIED FOR THIS PROJECT HAS BEEN GENERALLY SELECTED BASED ON DIMENSIONS TO FIT THE SPACE. THE CONTRACTOR SHALL VERIFY EQUIPMENT DIMENSIONS AND/OR ANY INTERFERENCES PRIOR TO ORDERING THE EQUIPMENT.
13. MANUFACTURER'S RECOMMENDATIONS FOR CONDUCTOR SIZING, CIRCUIT BREAKER OR FUSE RATING OF ELECTRICALLY OPERATED EQUIPMENT MAY DIFFER FROM THOSE INDICATED ON DRAWINGS. CONTRACTOR SHALL CONFIRM RATINGS PRIOR TO ORDERING EQUIPMENT.
14. CONTRACTOR SHALL REVIEW THE MECHANICAL AND PLUMBING DRAWINGS IF APPLY, AND CONNECT ELECTRICALLY OPERATED EQUIPMENT UNLESS OTHERWISE NOTED. COORDINATE THE LOCATION AND ELECTRICAL CONNECTION REQUIREMENTS PRIOR TO ORDERING OF ELECTRICAL AND MECHANICAL EQUIPMENT.
15. CONTRACTOR SHALL REVIEW THE SECTIONS OF EACH DIVISION OF THE SPECIFICATION (WHERE APPROPRIATE) AND PROVIDE CONNECTIONS TO ELECTRICALLY OPERATED EQUIPMENT AS MAY BE SPECIFIED THEREIN.
16. ALL CONDUIT ONLY (CO) NOTED SHALL HAVE PULL ROPES OR WIRES INSTALLED, TENSILE STRENGTH MINIMUM OF 200 FT/LBS.
17. COORDINATE ALL UG PULLBOX LOCATIONS WITH THE CIVIL AND LANDSCAPE PLANS. REPORT AND RESOLVE ANY DISCREPANCIES PRIOR TO START OF WORK.
18. ALL ELECTRICAL MATERIALS AND EQUIPMENT SHALL BE LISTED BY UNDERWRITER'S LABORATORIES OR OTHER APPROVED NRTL, AND SHALL BEAR THEIR LABEL. ALL CONTROL PANELS SHALL BE SO LISTED AS AN ASSEMBLY.
19. ELECTRICAL EQUIPMENT AND FEEDERS SHALL BE SUPPORTED AND/OR ANCHORED IN ACCORDANCE WITH CBC SEISMIC REQUIREMENTS. DO NOT SUPPORT CONDUITS FROM MECHANICAL DUCTS, PLUMBING, PIPING, OR EQUIPMENT OF ANY KIND.
20. THE CONTRACTOR SHALL FURNISH ALL LABOR, MATERIALS, FEES AND EQUIPMENT SPECIFIED. INDICATED OR IMPLIED IN THESE DOCUMENTS TO ACCOMPLISH THE CONSTRUCTION IN A PROFESSIONAL, WORKMANLIKE MANNER. ANY DISCREPANCIES BETWEEN THE CONSTRUCTION TASKS INDICATED AND LOCAL CODES AND/OR ORDINANCES SHALL BE BROUGHT TO THE IMMEDIATE ATTENTION OF THE GENERAL CONTRACTOR AND/OR OWNER FOR RESOLUTION BEFORE PROCEEDING WITH THE WORK AT ISSUE.
21. THE CONTRACTOR SHALL CONSULT THE MECHANICAL, STRUCTURAL, AND OTHER DRAWINGS AND DOCUMENTATION RELATED TO THE PROJECT FOR ADDITIONAL WORK TO BE PROVIDED.
22. THE OWNER RETAINS FIRST SALVAGE RIGHTS TO ALL EXISTING EQUIPMENT REMOVED UNDER THIS CONTRACT. THE ELECTRICAL CONTRACTOR SHALL CONSULT WITH THE OWNER FOR DISPOSITION OF THE EXISTING EQUIPMENT TO BE REMOVED.
23. ANY WORK INSTALLED INCORRECTLY, OR BEFORE APPROVAL HAS BEEN OFFICIALLY GRANTED FOR THOSE ITEMS AT ISSUE, SHALL BE CORRECTED BY THE ELECTRICAL CONTRACTOR AT NO CHARGE TO OWNER/ARCHITECT/CLIENT.
24. ALL MATERIALS AND EQUIPMENT FURNISHED BY THE CONTRACTOR SHALL BE NEW AND COMPLETELY SERVICEABLE UNLESS OTHERWISE SPECIFIED.
25. CONTRACTOR SHALL COORDINATE ROUGH-IN AND FINAL CONNECTION REQUIREMENTS WITH THE OWNER, EQUIPMENT SUPPLIERS, GENERAL CONTRACTOR AND OTHER BUILDING TRADES BEFORE PROCEEDING WITH ANY FURTHER RELATED WORK. INSTALLATIONS SHALL BE IN FULL ACCORDANCE WITH EQUIPMENT MANUFACTURER'S RECOMMENDATIONS AND REQUIRED CODES. CONFLICTS AND INTERFERENCES SHALL BE RESOLVED IMMEDIATELY, BEFORE ANY INSTALLATION BEGINS.
26. FINAL ACCEPTANCE OF WORK IN PLACE SHALL BE SUBJECT TO APPROVAL BY OWNER'S REPRESENTATIVE AND ARCHITECT/ENGINEER. INSTALLATION APPROVAL SHALL BE BASED ON APPROVED SUBMITTALS, SHOP DRAWINGS AND LOCAL INSPECTION.
27. CONTRACTOR SHALL SUBMIT "FOR RECORD" MARKUP DRAWINGS WITHIN TWO (2) WEEKS AFTER DATE OF NOTIFICATION OF FINAL APPROVAL OF WORK-IN-PLACE. CONTRACTOR'S FINAL INVOICE WILL NOT BE PAID WITHOUT COMPLETE DOCUMENTATION.
28. CONTRACTOR SHALL WARRANT ALL WORKS FOR A PERIOD OF ONE (1) YEAR FROM DATE OF ACCEPTANCE OF WORK-IN-PLACE. CONTRACTOR SHALL REPAIR OR REPLACE ANY DEFECTIVE WORK INCLUDING MATERIALS AND EQUIPMENT AT NO ADDITIONAL COST TO THE OWNER WITHIN WARRANTY PERIOD.
29. THE CONTRACTOR SHALL PROVIDE ALL FUSES AND OVERLOAD HEATER ELEMENTS REQUIRED FOR THIS CONTRACT INSTALLATION INCLUDING ANY FUSES BLOWN DURING INITIAL TESTING.
30. ELECTRICAL CONTRACTOR SHALL BE RESPONSIBLE FOR DAMAGES TO ALL WALLS, FLOORS AND PAVING. IF DAMAGE OCCURS DURING CONSTRUCTION, ELECTRICAL CONTRACTOR SHALL COORDINATE WITH OWNER TO PATCH, PAINT AND REPAIR TO MATCH EXISTING CONDITIONS.
31. CONDUIT AND WIRE SCHEDULE FOR NEW EQUIPMENT ARE GENERALLY INDICATIVE. CONTRACTOR SHALL REFER TO MANUFACTURER AND SUPPLIER OF EQUIPMENT FOR DETAILED WIRING DIAGRAM AND VERIFY THE EXACT ROUTING AND CONDUCTOR SIZE.
32. THE CONTRACTOR SHALL REFER TO MANUFACTURER AND SUPPLIER OF ELECTRICAL CONTROL EQUIPMENT FOR EXACT WIRING INTERCONNECTION.
33. ALL CONDUCTORS SHALL BE ALUMINUM OR COPPER STRANDED, AND HAVE INSULATION TEMPERATURE RATING NOT LESS THAN 90°C, UNLESS OTHERWISE NOTED.
34. IDENTIFICATION OF GROUNDED CONDUCTORS SHALL BE IN ACCORDANCE WITH NEC 200.6. IDENTIFICATION OF EQUIPMENT GROUNDING CONDUCTORS SHALL BE IN ACCORDANCE WITH NEC 250.119. IDENTIFICATION OF UNGROUNDED CONDUCTORS SHALL BE IN ACCORDANCE WITH NEC 210.5(C) AND SHALL BE IDENTIFIED BY THE FOLLOWING COLORED INSULATION, MARKING TAPE, OR TAGGING AS FOLLOWS:

SYSTEM	480Y/277V	208Y/120V	120/240V 1-PHASE
PHASE A	BROWN	BLACK	BLACK (LINE 1)
PHASE B	ORANGE	RED	RED (LINE 2)
PHASE C	YELLOW	BLUE	

PV OUTPUT CIRCUIT	NEGATIVE GROUNDED SYSTEM	UNGROUNDED SYSTEM
POSITIVE (+)	RED	RED
NEGATIVE (−)	PER 200.6	BLACK

PV SOURCE CIRCUIT	NEGATIVE GROUNDED SYSTEM	UNGROUNDED SYSTEM
POSITIVE (+)	RED	RED
NEGATIVE (−)	PER 200.6	BLACK

35. USE WIRE IDENTIFICATION COLOR CODE PER SPECIFICATIONS BELOW.

COLOR	DESCRIPTION
LT. BLUE	INTRINSICALLY SAFE CIRCUITS
GREEN	EQUIPMENT GROUNDING CONDUCTOR
YELLOW	CONTROL CIRCUITS SUPPLIED FROM EXTERNAL POWER SOURCE, INTERLOCKS

36. MEDIUM VOLTAGE CABLE MARKINGS SHALL UTILIZE COLORED CONDUCTOR TAPE FOR ALL PHASES: YELLOW COLORED, SELF-ADHESIVE VINYL TAPE NOT LESS THAN 3 MILS THICK BY 1 INCH WIDE. 1 STRIPE FOR THE A PHASE CONDUCTOR, 2 STRIPES FOR THE B PHASE CONDUCTOR, 3 STRIPES FOR THE C PHASE CONDUCTOR. TAPE SHALL BE LOCATED AT ALL TERMINATIONS, SPLICES AND PULL BOXES.
37. THE ELECTRICAL ENGINEER OF RECORD SHALL PROVIDE REQUIRED SETTINGS FOR ALL ADJUSTABLE CIRCUIT BREAKERS AND RELAYS SPECIFIED IN THIS PROJECT. ARC FLASH LABELS SHALL ALSO BE PROVIDED FOR ALL NEW ELECTRICAL EQUIPMENT AS NEEDED. SETTINGS AND ARC FLASH LABELS ARE TYPICALLY SHOWN IN NEW ELECTRICAL SYSTEM STUDIES, BUT MAY INSTEAD BE PROVIDED IN THE PROJECT DRAWINGS OR VIA RFI. CONTRACTOR SHALL VERIFY ALL CIRCUIT BREAKER AND RELAY SETTINGS ARE PROVIDED AND HAVE BEEN APPLIED ONSITE. IF SETTINGS ARE NOT PROVIDED, CONTRACTOR SHALL REQUEST THEM FROM THE ENGINEER OF RECORD.
39. OUTDOOR SITE LIGHTING SHALL COMPLY WITH DARK SKY GUIDELINES.
40. TAMPER-RESISTANT RECEPTACLES SHALL BE INSTALLED IN ALL DWELLING UNITS AS REQUIRED IN NEC 406.12.

ABBREVIATIONS

A, AMPS	AMPERES	FA	FIRE ALARM	MTD	MOUNTED	TBD	TO BE DETERMINED
A/C	AIR CONDITIONER	FACP	FIRE ALARM CONTROL PANEL	MSBD	MAIN SWITCHBOARD	TD	TIME DELAY
AC	ALTERNATING CURRENT	FLA	FULL LOAD AMPERES	MSGR	MAIN SWITCHGEAR	TEL	TELEPHONE
AF	AMPERE FRAME	(F)	FUTURE	MV	MEDIUM VOLTAGE	TVSS	TRANSIENT VOLTAGE SURGE SUPPRESSION
AIC	AMPERE INTERRUPTING CURRENT	GND	GROUND	MVA	MEGAVOLT-AMPERES		
AL	ALUMINUM	GALV	GALVANIZED	(N)	NEW	TYP	TYPICAL
AT	AMPERES TRIP	GRS	GALVANIZED RIGID STEEL	N	NEUTRAL	UG	UNDERGROUND
ATS	AUTOMATIC TRANSFER SWITCH	GFCI	GROUND FAULT CIRCUIT INTERRUPTER	NC	NORMALLY CLOSED	UL	UNDERWRITERS LABORATORIES
AWG	AMERICAN WIRE GAUGE	GFP	GROUND FAULT PROTECTION	NIC	NOT IN CONTRACT	UON	UNLESS OTHERWISE NOTED
BC	BARE COPPER	HH	HANDHOLE	NO	NORMALLY OPEN	UPB	UNDERGROUND PULLBOX
BESS	BATTERY ENERGY STORAGE SYSTEM	HP	HORSEPOWER	NTS	NOT TO SCALE	UPS	UNINTERRUPTIBLE POWER SUPPLY
BLDG	BUILDING	HV	HIGH VOLTAGE	OFCI	OWNER FURNISHED CONTRACTOR INSTALLED	UTP	UNSHIELDED TWISTED PAIR
BMS	BUILDING MANAGEMENT SYSTEM	HVAC	HEATING, VENTILATION, AIR CONDITIONING			V	VOLTS
C	CONDUIT	HZ	HERTZ	OH	OVERHEAD	VA	VOLT-AMPERES
CB	CIRCUIT BREAKER	IMC	INTERMEDIATE METAL CONDUIT	PH, Φ	PHASE	VFD	VARIABLE FREQUENCY DRIVE
CC	CENTER TO CENTER	ISC	INTERRUPTING SHORT CIRCUIT	PB	PUSHBUTTON	VFI	VACUUM FUSED INTERRUPTER
CKT	CIRCUIT	INST	INSTANTANEOUS	PDU	POWER DISTRIBUTION UNIT	VP	VAPORPROOF
℄	CENTER LINE	JB	JUNCTION BOX	PNL	PANEL	W	WATTS, WIRE
CLG	CEILING	KAIC	KILO AMPERES INTERRUPTION CAPACITY	POCC	POINT OF COMMON CONNECTION	WP	WEATHERPROOF
CLR	CLEAR	KCMIL	KILO CIRCULAR MILS	PV	PHOTOVOLTAIC	WT	WATERTIGHT
CO	CONDUIT ONLY WITH PULL ROPE	KV	KILOVOLTS	PVC	POLYVINYL CHLORIDE	XFMR	TRANSFORMER
CONC	CONCRETE	KVA	KILOVOLT-AMPERES	(R)	EXISTING TO BE REMOVED	XLPE	CROSS-LINKED POLYETHYLENE
CU	COPPER	KWH	KILO WATT-HOURS	(RE)	NEW LOCATION OF RELOCATED DEVICE	XP	EXPLOSION PROOF
DB	DIRECT BURIAL	LCP	LIGHTING CONTROL PANEL	(RL)	EXISTING TO BE RELOCATED		
DC	DIRECT CURRENT	LTG	LIGHTING	SCA	SHORT CIRCUIT AVAILABLE		
DIA	DIAMETER	MAX	MAXIMUM	SEC	SECONDARY		
DN	DOWN	MCC	MOTOR CONTROL CENTER	SPECS	SPECIFICATIONS		
DWG	DRAWING	MCB	MAIN CIRCUIT BREAKER	STD	STANDARD		
EM	EMERGENCY	MCP	MOTOR CIRCUIT PROTECTOR	STP	SHIELDED TWISTED PAIR		
EMT	ELECTRICAL METALLIC TUBING	MFR	MANUFACTURER	SWBD	SWITCHBOARD		
EPO	EMERGENCY POWER OFF	MH	MANHOLE	SWGR	SWITCHGEAR		
EQ	EQUAL	MIN	MINIMUM	SYM	SYMMETRICAL		
EQUIP	EQUIPMENT	MISC	MISCELLANEOUS				
(E)	EXISTING	MLO	MAIN LUGS ONLY				

ELECTRICAL SYMBOLS

POWER

- EXPOSED CONDUIT OR CABLE
- CONDUIT (UNDERGROUND OR CONCEALED IN FLOOR, WALL, OR CEILING)
- JUNCTION BOX WITH COVER
- PULL BOX WITH SCREW (HINGED) COVER
- 52 — CIRCUIT BREAKER, INSCRIBED NUMBER INDICATES IEEE DEVICE NUMBER
- LED FIXTURE
- POST TOP MOUNTED FIXTURE
- KEYED NOTE

SCHEMATIC

- NON-FUSIBLE LOAD INTERRUPTER SWITCH, AIR INSULATED
- FUSIBLE LOAD INTERRUPTER SWITCH, AIR INSULATED
- CIRCUIT BREAKER, MOLDED CASE
- MOTOR CIRCUIT PROTECTOR
- CIRCUIT BREAKER WITH CURRENT LIMITING FUSES – SIZE AS SHOWN
- CIRCUIT BREAKER, DRAW-OUT TYPE
- GFR 52 — MAIN CIRCUIT BREAKER W/ GFR
- MOTOR OVERLOAD RELAY
- NORMALLY OPEN CONTACT
- NORMALLY CLOSED CONTACT
- BUS DUCT (SINGLE LINE ONLY)
- W/H — WATT/HOUR REVENUE METER
- VAR/H — VOLTAMPERES REACTIVE REVENUE METER
- NEUTRAL DISCONNECT LINK
- TRANSFORMER
- ZIG ZAG TRANSFORMER
- HIGH VOLTAGE CABLE TERMINATION
- GROUNDING ELECTRODE
- XXXXX — CIRCUIT CALLOUT
- 52 — ANSI/IEEE DEVICE NUMBER

QUALITY ASSURANCE NOTES

1. FOLLOW AND ADHERE TO ALL MANUFACTURERS INSTALLATION INSTRUCTIONS.
2. ALL BACKFILL AND COMPACTION SHALL COMPLY WITH GEOTECH REPORT.
3. ALL ELECTRICAL TERMINATIONS SHALL BE TORQUED TO MANUFACTURERS' SPECIFICATIONS. WHERE THEY ARE NOT SPECIFIED, REFER TO UL STANDARDS 486A AND 486B. FINAL TORQUE TEST DOCUMENTATION SHALL BE PROVIDED TO OWNER OR HIS REPRESENTATIVE, WITH ONE OR THE OTHER IN WITNESS AT RANDOM TIMES.
4. LINE AND LOAD CONDUCTORS SHALL BE BRACED AND SUPPORTED (LASHED, HELD FIRMLY IN PLACE) IN ACCORDANCE WITH THE EQUIPMENT MANUFACTURER'S SPECIFICATIONS AND NECA/IBEW APPROVED INSTALLATION PRACTICES.
5. COMPRESSION CONNECTORS SHALL BE CRIMPED ACCORDING TO THE MANUFACTURER'S INSTALLATION INSTRUCTIONS, USING MANUFACTURER-APPROVED TOOLS AND DIES. ALWAYS TUG-TEST ALL TERMINATIONS AFTER COMPLETION.
6. LISTED OXIDE INHIBITOR MUST BE APPLIED TO ALL ALUMINUM WIRE TERMINATIONS. LUGS USED WITH ALUMINUM WIRE MUST BE LISTED FOR USE WITH ALUMINUM, OR BE MARKED DUAL-RATED (AL9CU).
7. CORROSION POTENTIAL IN OUTDOOR ELECTRICAL CONNECTIONS SUCH AS GROUNDING AND BONDING CONNECTIONS SHOULD BE REDUCED BY MINIMIZING CONTACT BETWEEN DISSIMILAR METALS. WITHIN 1 MILE OF THE OCEAN, APPLICATION OF OUTDOOR ELECTRICAL JOINT COMPOUND BETWEEN DISSIMILAR METAL CONNECTIONS IS RECOMMENDED. ALL LUGS AND TERMINATION DEVICES USED OUTDOORS MUST BE LISTED FOR DIRECT BURIAL OR OUTDOOR USE.

MOUNTING HEIGHTS

MOUNTING HEIGHTS SHALL BE TO BOTTOM OF BOX, UNLESS OTHERWISE NOTED.

RECEPTACLES	18"	VOLUME CONTROLS	MAX. 48" TO TOP
RECEPTACLE WIREWAYS	43"	THERMOSTATS	MAX. 48" TO TOP
SWITCHES	MAX. 48" TO TOP	TELE/COMMUNICATION OUTLET	15" MIN. TO BOTTOM
MOTOR STARTERS, TO TOP	72"	PANELBOARDS, TO TOP	72"
DISCONNECTS, TO TOP	72"	CABINETS, TO TOP	72"
JUNCTION BOXES	15" MIN.	FIRE ALARM PULL STATIONS	MAX 48" TO TOP

ACCEPTANCE TESTING

THE FOLLOWING TESTS SHALL BE PERFORMED PRIOR TO ENERGIZATION OF THE SYSTEM WHEN APPLICABLE: TEST RESULTS SHALL BE MADE AVAILABLE TO THE ENGINEER OF RECORD OR BUILDING OFFICIAL UPON REQUEST.

1. GROUND-FAULT PROTECTION EQUIPMENT
   - 1.1 VERIFY PICKUP AND TIME DELAY SETTINGS ARE IN ACCORDANCE WITH SETTINGS PROVIDED BY THE ENGINEER OR EQUIPMENT MANUFACTURER.
2. ELECTRICAL TESTS SWITCHBOARDS, PANELBOARDS, MOTOR CONTROL CENTERS AND OTHER EQUIPMENT RATED 1000 AMPERES OR MORE, OR OVER 1000 VOLTS.
   - 2.1. RELAY PICKUP CURRENT BY CURRENT INJECTION AT THE SENSOR AND OPERATION OF THE CIRCUIT INTERRUPTING DEVICE
   - 2.2. TEST RELAY TIMING.
   - 2.3. TEST PRIMARY CONTROL VOLTAGE AT NOT MORE THAN 57 PERCENT OF ITS RATED VOLTGROUNDED CONDUCTOR INSULATION RESISTANCE
   - 2.4. VERIFICATION OF CONTINUITY OF EQUIPMENT GROUNDING SYSTEM.
   - 2.5. INSULATION RESISTANCE TEST ON EACH BUS AND PROTECTIVE DEVICE, PHASE-TO-PHASE AND PHASE-TO-GROUND.
   - 2.6. DIELECTRIC VOLTAGE-WITHSTAND TEST ON EACH BUS AND PROTECTIVE DEVICE, PHASE-TO-PHASE AND PHASE-TO-GROUND.
   - 2.7. CONTROL POWER TRANSFORMER, CONTROL POWER CIRCUITS AND POTENTIAL CIRCUITS.
   - 2.8. CONTROL AND PROTECTIVE DEVICES FOR PROPER OPERATION.
3. ELECTRICAL TESTS ON TRANSFORMERS RATED 100 KVA OR MORE SINGLE PHASE AND 300 KVA OR MORE THREE PHASE.
   - 3.1. INSULATION RESISTANCE TEST ON EACH WINDING. TEST WINDING-TO-WINDING AND WINDINGS-TO-GROUND.
   - 3.2. TURNS-RATIO TEST FOR EACH WINDING AT ALL TAP SETTINGS.
   - 3.3. CONTROL POWER TRANSFORMER, CONTROL POWER CIRCUITS AND POTENTIAL CIRCUITS.
   - 3.4. CONTROL AND PROTECTIVE DEVICES FOR PROPER OPERATION.
4. INSULATION RESISTANCE TEST ON EACH CONDUCTOR, PHASE-TO-PHASE AND PHASE-TO-GROUND FOR ALL AC CONDUCTORS
   - 4.1. VLF TESTING FOR MEDIUM VOLTAGE CONDUCTORS
   - 4.2. MEGGER TESTING FOR LOW VOLTAGE CONDUCTORS
5. ELECTRICAL TESTS ON EMERGENCY AND STANDBY POWER SYSTEMS: SWITCHBOARDS, PANELBOARDS, DISTRIBUTION BOARDS, TRANSFER EQUIPMENT, POWER SOURCE, CONDUCTORS, FIRE PUMPS, EXHAUST AND VENTILATION FANS.
   - 5.1. CONTROL AND PROTECTIVE DEVICES FOR PROPER OPERATION.
   - 5.2. PHASE ROTATION TEST
   - 5.3. INSULATION RESISTANCE TEST ON FEEDER CONDUCTORS AND EQUIPMENT, PHASE-TO-PHASE AND PHASE-TO-GROUND
   - 5.4. AUTOMATIC LOAD TRANSFER TEST. TEST NORMAL AND EMERGENCY POWER, OR NORMAL AND STANDBY POWER, OR BOTH. SIMULATE LOSS OF EMERGENCY AND NORMAL POWER OR STANDBY AND POWER, OR BOTH. SIMULATE ALL FORMS OF SINGLEPHASE CONDITIONS.
   - 5.5. CONDUCT OPERATIONAL TEST ON SYSTEM UNDER LOAD CONDITIONS.
6. USING A PV MODULE TEST KIT (SEWARD OR EQUIVALENT EQUIPMENT), PERFORM VOC, ISC, AND INSULATION RESISTANCE TESTING ON ALL PV MODULE STRINGS.
7. INVERTER TESTING
   - 7.1. LINE TO LINE VOLTAGE
   - 7.2. LINE TO NEUTRAL VOLTAGE
   - 7.3. ALL COMMISSIONING STEPS LISTED IN INSTALLATION MANUAL PROVIDED BY MANUFACTURER

EQUIPMENT SPECIFICATIONS

THE FOLLOWING EQUIPMENT SPECIFICATION AND SUBMITTALS SHALL BE PROVIDED TO AND APPROVED BY THE ENGINEER OF RECORD PRIOR TO INSTALLATION:

- ELECTRICAL EQUIPMENT INCLUDING: SWITCHGEAR, PANELBOARDS, MOTOR CONTROL CENTERS, AND SAFETY SWITCHES.
- CONDUCTORS AND CABLES INCLUDING: MEDIUM VOLTAGE CABLES, LOW VOLTAGE CABLES, PV DC WIRING, AND CONTROL CABLES.
- COMMUNICATION CABLES SUCH AS RS-485/EIA-485 CABLE, ETHERNET CABLE, AND FIBER OPTIC CABLE.
- SCADA DEVICES SUCH AS DATA ACQUISITION SYSTEM, RTU, RTAC, OR CONTROLLER.
- PROTECTIVE DEVICES INCLUDING: CIRCUIT BREAKERS (INCLUDING TRIP UNITS IF PRESENT), FUSES, AND RELAYS.
- PV EQUIPMENT INCLUDING: SOLAR MODULE, UL2703 SOLAR MOUNTING SYSTEM, TRANSFORMERS, INVERTERS, COMBINER BOXES, RECOMBINER BOXES, AND RAPID SHUTDOWN BOXES. ALSO SUBMIT DEVICES NOT INTEGRAL TO THE SOLAR MODULE MOUNTING SYSTEM, SUCH AS MODULE GROUNDING LUGS OR DEVICES.
- CABLE TRAY INCLUDING WIRE AND TRAY SIZING CALCULATIONS

SYSTEM HOST

MALAGA COUNTY WATER DISTRICT — SERVING HOME AND INDUSTRY

3580 S. FRANK ST
FRESNO, CA 93725
559-485-7353

SYSTEM DEVELOPER

sitelogiQ

1512 SILICA AVE
SACRAMENTO, CA 95815
916-988-8808

ELECTRICAL CONSTRUCTORS AND ENGINEERS

BLYMYER ENGINEERS

1101 MARINA VILLAGE PKWY
ALAMEDA, CA 94501
510-521-3773

STRUCTURAL ENGINEERING AND STEEL CONSTRUCT

TEICHERT SOLAR

10620 TREENA STREET, STE 140
SAN DIEGO, CA 92131
562-283-2970

ARCHITECT OF RECORD

M M P V d e s i g n

Mariana Moncada, Architect
718 West Arbor Drive
San Diego, CA 92103
619.632.2883

ARCHITECT / ENGINEER OF RECORD

NOT FOR CONSTRUCTION

PROJECT

MALAGA CWD - WATER TREATMENT PLANT

3749 S MAPLE AVE
FRESNO, CA 93725

NO.	REVISION	DATE

DATE: 07.14.23

SHEET TITLE

ELECTRICAL NOTES

SHEET NO.:

E-1.0

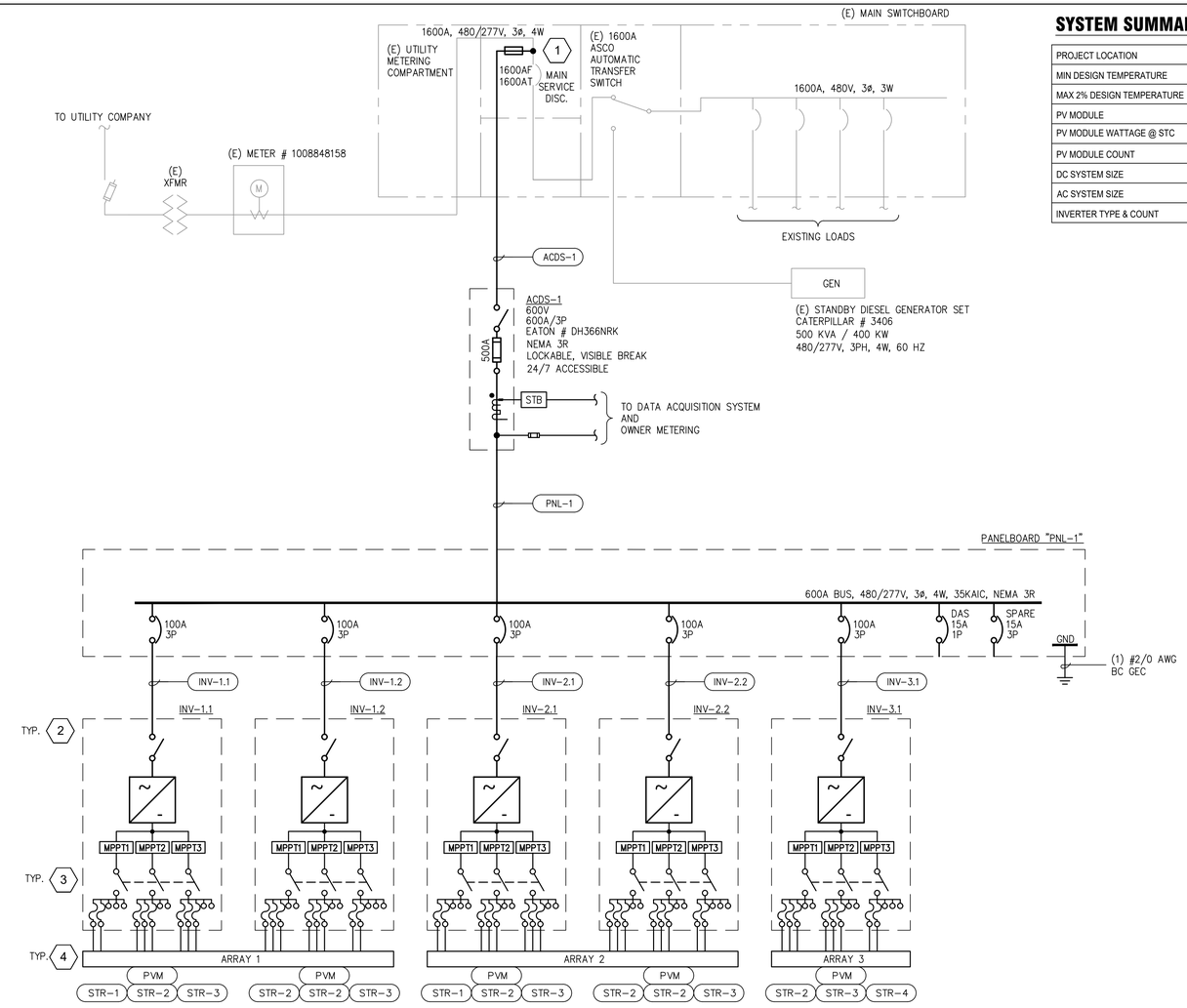

1 SINGLE LINE DIAGRAM
SCALE: NTS

SYSTEM SUMMARY

PROJECT LOCATION	3749 S MAPLE AVE, FRESNO, CA 93725
MIN DESIGN TEMPERATURE	-3.3°C
MAX 2% DESIGN TEMPERATURE	40.1°C
PV MODULE	CS6W-540MB-AG
PV MODULE WATTAGE @ STC	540
PV MODULE COUNT	653
DC SYSTEM SIZE	352.62 KW DC
AC SYSTEM SIZE	300 KW / 300 KVA
INVERTER TYPE & COUNT	(5) CPS SCA60KTL-DO/US-480 (60 KVA)

GENERAL NOTES

1. ALL EQUIPMENT SHALL BE UL LISTED.
2. INSTALLATION SHALL BE IN ACCORDANCE WITH LATEST ELECTRICAL AND BUILDING CODES. AHJ HAS FINAL JURISDICTIONAL AUTHORITY ON CODE APPLICATION AND COMPLIANCE.
3. ALL INVERTER WIRING AND GROUNDING METHODS SHALL CONFORM TO THE MANUFACTURER'S RECOMMENDED PRACTICES. REFER TO PLANNING & INSTALLATION MANUAL FOR THIS GUIDANCE.
4. ALL DISCONNECTS SHALL BE LABELED "WARNING – ELECTRIC SHOCK HAZARD – DO NOT TOUCH TERMINALS" AND "TERMINALS ON BOTH LINE AND LOAD SIDES MAY BE ENERGIZED IN THE OPEN POSITION" PER NEC 690.13(B).
5. EXPOSED NON–CURRENT CARRYING METAL PARTS OF MODULE FRAMES, EQUIPMENT AND ENCLOSURES SHALL BE GROUNDED IN ACCORDANCE WITH NEC 250.134 AND 250.136.
6. COORDINATE DATE, TIME, AND LENGTH OF ANY REQUIRED FACILITY SHUTDOWNS WITH OWNER PRIOR TO CONSTRUCTION.
7. LUGS SHALL BE DUAL RATED FOR COPPER/ALUMINUM CONDUCTORS
8. PANELBOARDS SHALL INCLUDE A SINGLE–POLE AIR GAP BETWEEN ALL INVERTER BREAKERS.
9. REFER TO SHEET(S) E–7.X FOR ELECTRICAL DETAILS
   REFER TO SHEET(S) E–9.X FOR WARNING LABELS AND LOCATIONS
   REFER TO SHEET(S) E–10.X FOR EQUIPMENT DATASHEETS
10. ALL EQUIPMENT SHALL HAVE ARC FLASH WARNING LABELS WITH APPLICABLE INCIDENT ENERGY LEVELS, WORKING DISTANCES, AND REQUIRED PPE IN ACCORDANCE WITH NFPA 70E.
11. PHOTOVOLTAIC MODULES TO BE GROUNDED USING FACTORY GROUND POINT ONLY, OR OTHER APPROVED UL LISTED MEANS/METHODS.
12. PV SYSTEM AND EQUIPMENT COMPLIANT WITH THE FOLLOWING NEC CODES:
    – POINT OF INTERCONNECTION PER NEC 705.11
    – INTEGRATED AC DISCONNECT PER NEC 705.20
    – LOCATION OF OVERCURRENT PROTECTION PER NEC 705.11(C)
    – DISCONNECTING OF PHOTOVOLTAIC MODULES PER NEC 690.15 FOR INVERTER INTEGRATED DC DISCONNECTS

KEYED NOTES:

1. CONNECT PV SYSTEM OUTPUT TO THE SUPPLY SIDE OF THE SERVICE DISCONNECTING MEANS, AS ALLOWED BY NEC 705.11. CONTRACTOR TO CONFIRM CONDITION AND RATING OF THE EXISTING SWITCHBOARD FOR SUPPLY SIDE TAP INSTALLATION, AND NOTIFY THE ENGINEER IN CASE OF DISCREPANCIES.
   CABLE LIMITERS SHALL BE INSTALLED AT TAP, IF THE OVERCURRENT PROTECTION IS MORE THAN 10 FEET FROM TAP.
2. INVERTER: CPS CHINT POWER FOR UNGROUNDED PV ARRAYS.
   – 480VAC, 3PH–3W, 1000VDC
   – NEMA 3R ENCLOSURE.
   – NO ISOLATION TRANSFORMER.
   – INTEGRATED AC DISCONNECT
   – UL1741 LISTED WITH INTEGRAL ANTI–ISLANDING PROTECTION. UL1741 LISTING INCLUDES COMPLIANCE WITH IEEE519 FOR POWER QUALITY, IEEE929 FOR INTERCONNECTION SAFETY AND NEC REQUIREMENTS.
3. DC DISCONNECT SWITCH
   – INTEGRATED GANG OPERATED DC SWITCH FOR ALL MPPTS.
   – MIN FUSE SIZE AS INDICATED IN PV MODULE TABLE.
   – DC DISCONNECT SWITCH SHALL COMPLY WITH NEC 690.15 REQUIREMENTS
   – REFER TO MANUFACTURER'S INSTALLATION INSTRUCTIONS FOR DETAILS.
4. DIVIDE CONNECTED STRINGS AS EVENLY AS POSSIBLE BETWEEN INVERTER MPPT UNITS. UNDER NO CIRCUMSTANCES SHOULD THE SUM OF STRING Isc CONNECTED TO AN MPPT UNIT EXCEED THE MAXIMUM Isc LISTED ON THE INVERTER DATASHEET.
   TOTAL VOLTAGE DROP FOR DC CIRCUITS SHALL NOT EXCEED 2%, OTHERWSE SIZE OF CONDUCTORS MAY HAVE TO BE INCREASED. CONTRACTOR SHALL NOTIFY ENGINEER IF ACTUAL ROUTING EXCEEDS THE DESIGNED MAXIMUM ONE–WAY DISTANCE.

INVERTER CONFIGURATION

INVERTER ID	INVERTER ARRAY	INVERTER MAKE & MODEL	INVERTER OCP	INVERTER KW	INVERTER KVA	STR-1 QTY	STR-2 QTY	STR-3 QTY	STR-4 QTY	MODULES PER INVERTER	KW DC PER INVERTER
INV-1.1	1	CPS SCA60KTL-DO/US-480 (60 kVA)	100/3P	60	60	2	3	3	0	129	69.66
INV-1.2	1	CPS SCA60KTL-DO/US-480 (60 kVA)	100/3P	60	60	0	6	2	0	130	70.2
INV-2.1	2	CPS SCA60KTL-DO/US-480 (60 kVA)	100/3P	60	60	2	3	3	0	129	69.66
INV-2.2	2	CPS SCA60KTL-DO/US-480 (60 kVA)	100/3P	60	60	0	6	2	0	130	70.2
INV-3.1	3	CPS SCA60KTL-DO/US-480 (60 kVA)	100/3P	60	60	0	3	3	2	135	72.9

AC SCHEDULE AND CALCULATIONS

* CONDUITS ARE MINIMUM REQUIRED SIZES; INSTALLED SIZES MAY BE LARGER, IF USED
** WIRE AMPACITY BASED ON WIRE TERMINAL TEMPERATURE RATING OR WIRE INSULATION TEMPERATURE RATING (WHICHEVER IS LOWER)

CIRCUIT ID	VOLTAGE	CURRENT	OCP	WIRE MATERIAL	WIRE INSULATION	PARALLEL SETS OF WIRES	PHASE CONDUCTORS PER SET	NEUTRAL CONDUCTOR PER SET	EGC PER SET	**WIRE AMPACITY	*MIN EMT (IN)	*MIN LFMC (IN)	*MIN RMC (IN)	*MIN PVC (IN)	DISTANCE (FT)	% VOLTAGE DROP
INV-1.1	480	72.2	100	Al	THWN-2	1	(3) #1/0 AWG	N/A	#6 AWG	120	1.25	1.25	1.25	1.25	150	0.78%
INV-1.2	480	72.2	100	Al	THWN-2	1	(3) #1/0 AWG	N/A	#6 AWG	120	1.25	1.25	1.25	1.25	150	0.78%
INV-2.1	480	72.2	100	Al	THWN-2	1	(3) #1/0 AWG	N/A	#6 AWG	120	1.25	1.25	1.25	1.25	15	0.08%
INV-2.2	480	72.2	100	Al	THWN-2	1	(3) #1/0 AWG	N/A	#6 AWG	120	1.25	1.25	1.25	1.25	50	0.26%
INV-3.1	480	72.2	100	Al	THWN-2	1	(3) #1/0 AWG	N/A	#6 AWG	120	1.25	1.25	1.25	1.25	200	1.04%
PNL-1	480	361	500	Al	THWN-2	2	(3) 500 kcmil	#1/0 AWG	#1/0 AWG	310	2.5	3	3	3	200	0.59%
ACDS-1	480	361	500	Cu	THWN-2	2	(3) 350 kcmil	#1 AWG	#1 AWG	310	2.5	2.5	2.5	2.5	20	0.05%

DC SCHEDULE AND CALCULATIONS

*DESIGN TEMPERATURE BASED OFF OF -3.3°C LOW SITE TEMPERATURE. Voc (#/°C) = -0.26

CIRCUIT ID	# OF MODULES IN STRING	Voc	Vmp	Isc	Imp	KW @ STC	MIN FUSE SIZE	WIRE QTY & SIZE	WIRE AMPACITY AFTER DERATE	WIRE MATERIAL	WIRE INSULATION	MAX ONE-WAY DISTANCE	%VOLTAGE DROP
PVM	N/A	52.8	41.3	15.41	14.388	0.54	N/A	SEE MFR DATASHEET	N/A	SEE MFR DATASHEET	SEE MFR DATASHEET	N/A	N/A
STR-1	15	792.3	619.5	15.41	14.388	8.1	25	(2) #10 AWG (1) AWG #10 EGC	30.45	CU	PV WIRE	200	1.15%
STR-2	16	845.1	660.8	15.41	14.388	8.64	25	(2) #10 AWG (1) AWG #10 EGC	30.45	CU	PV WIRE	200	1.08%
STR-3	17	897.9	702.1	15.41	14.388	9.18	25	(2) #10 AWG (1) AWG #10 EGC	30.45	CU	PV WIRE	200	1.02%
STR-4	18	950.8	743.4	15.41	14.388	9.72	25	(2) #10 AWG (1) AWG #10 EGC	30.45	CU	PV WIRE	200	0.96%

NOTE: PV MODULE STC Imp and Isc ARE INCREASED BY 10% FACTOR TO ADDRESS BIFACIAL PERFORMANCE.

SYSTEM HOST
MALAGA COUNTY WATER DISTRICT – SERVING HOME AND INDUSTRY
3580 S. FRANK ST
FRESNO, CA 93725
559-485-7353

SYSTEM DEVELOPER
sitelogiQ
1512 SILICA AVE
SACRAMENTO, CA 95815
916-988-8808

ELECTRICAL CONSTRUCTORS AND ENGINEERS
BLYMYER ENGINEERS
1101 MARINA VILLAGE PKWY
ALAMEDA, CA 94501
510-521-3773

STRUCTURAL ENGINEERING AND STEEL CONSTRUCT
TEICHERT SOLAR
10620 TREENA STREET, STE 140
SAN DIEGO, CA 92131
562-283-2970

ARCHITECT OF RECORD
M M P V d e s i g n
Mariana Moncada, Architect
718 West Arbor Drive
San Diego, CA 92103
619.632.2883

ARCHITECT / ENGINEER OF RECORD

NOT FOR CONSTRUCTION

PROJECT
MALAGA CWD - WATER TREATMENT PLANT

3749 S MAPLE AVE
FRESNO, CA 93725

NO.	REVISION	DATE

DATE: 07.14.23

SHEET TITLE
SINGLE LINE DIAGRAM

SHEET NO.:
E-2.0

GENERAL NOTES

1 THE THREE LINE DIAGRAM IS SHOWN FROM **THE POINT OF INTERCONNECTION** TO THE FIRST INVERTER, AND IS INTENDED TO PROVIDE GENERAL GUIDANCE AND TYPICAL INVERTER DC CONFIGURATION.
REFER TO SINGLE LINE DIAGRAM FOR EQUIPMENT SPECIFICATIONS AND THE FULL SYSTEM REPRESENTATION.

KEYED NOTES:

1 SOLAR PHOTOVOLTAIC MODULES WIRED IN SERIES. EACH MODULE INCLUDES OUTDOOR RATED QUICK CONNECTOR FOR MODULE INTERCONNECTION.
DO NOT REMOVE THE QUICK CONNECTS, OTHERWISE THE MODULE WARRANTY AND U.L. LISTING MAY BE INVALIDATED.

2 BOND ELECTRICAL PANELS, AND INVERTER GND TERMINALS TO NEW ELECTRODE. USE UL LISTED IRREVERSIBLE COMPRESSION CONNECTORS OR EXOTHERMIC WELD PROCESS AS APPLICABLE.

3 GROUND ALL MODULES, USING UL LISTED **"BEACON"** GROUNDING CLIP WASHER AT EACH **"ZEE"** SOLAR MOUNTING CLIP, ALONG THE TOP ROW ONLY. REFER TO INSTALLATION MANUAL.
SEE PARTIAL GND PLAN ON DETAIL **5/E-7.1**.

4 INSTALL BONDING JUMPER #6 AWG CU BETWEEN SEPARATE PURLINS. #4 AWG CU SHALL BE USED TO BOND INVERTER'S GND TERMINAL, AND ZEE PURLINS IN DIFFERENT ROWS TO THE GE/STRUCTURE; AND WHERE REQUIRED TO BOND OTHER STRUCTURAL MEMBERS, TO ASSURE CONTINUITY OF GND CONNECTION.

5 AC DISCONNECT GEC TO CONNECT TO EXISTING GROUNDING ELECTRODE AT MAIN SWITCHGEAR. IF GROUNDING ELECTRODE IS NOT ACCESSIBLE, CONNECT THE NEW GEC TO THE EXISTING GEC OF THE MAIN SWITCHGEAR WITH THE IRREVERSIBLE SPLICE PER DETAILS **6,7,8/E-7.0**.

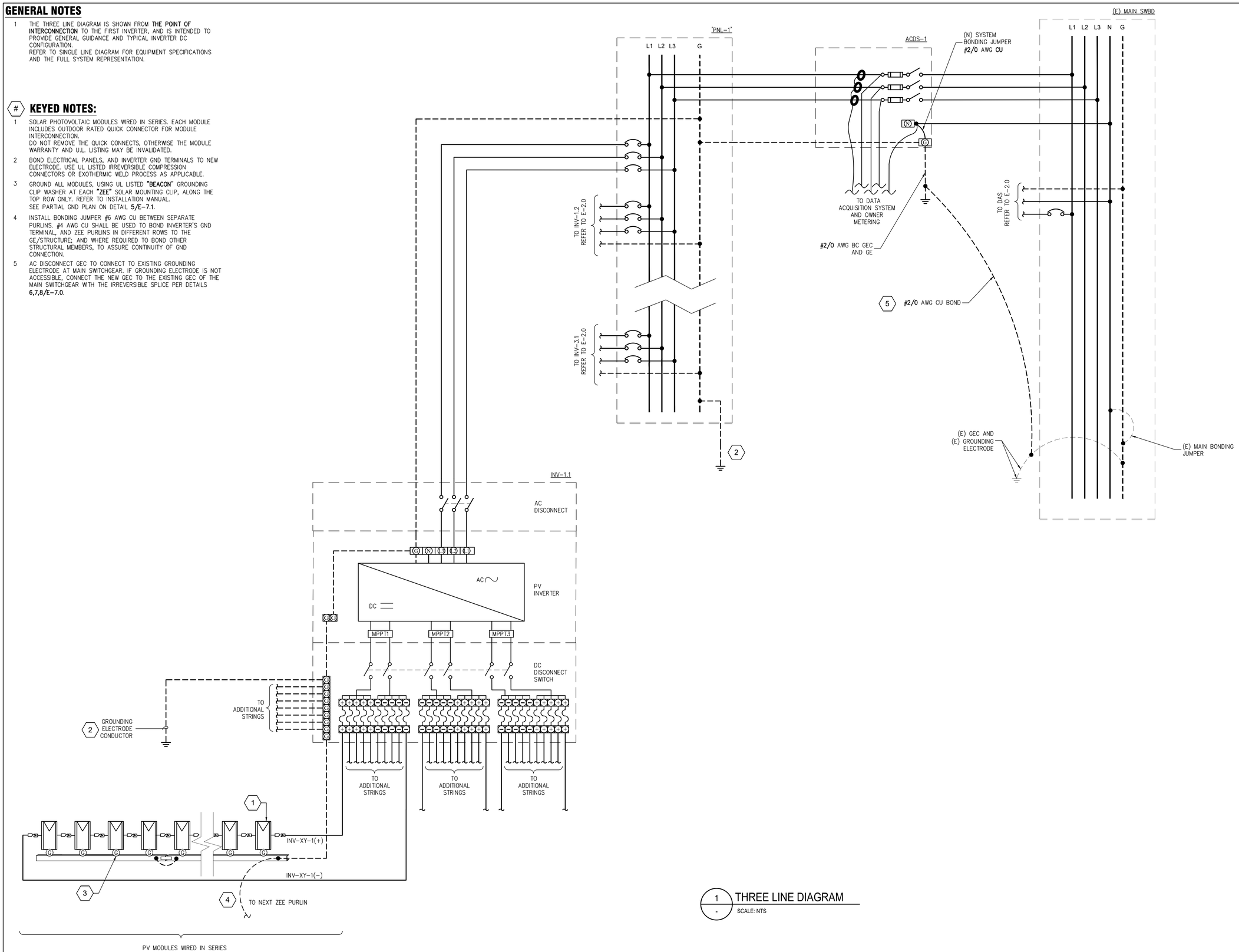

1 THREE LINE DIAGRAM
SCALE: NTS

SYSTEM HOST

MALAGA COUNTY WATER DISTRICT
SERVING HOME AND INDUSTRY

3580 S. FRANK ST
FRESNO, CA 93725
559-485-7353

SYSTEM DEVELOPER

sitelogiQ

1512 SILICA AVE
SACRAMENTO, CA 95815
916-988-8808

ELECTRICAL CONSTRUCTORS AND ENGINEERS

BLYMYER ENGINEERS

1101 MARINA VILLAGE PKWY
ALAMEDA, CA 94501
510-521-3773

STRUCTURAL ENGINEERING AND STEEL CONSTRUCT

TEICHERT SOLAR

10620 TREENA STREET, STE 140
SAN DIEGO, CA 92131
562-283-2970

ARCHITECT OF RECORD

M M **P V** d e s i g n

Mariana Moncada, Architect
718 West Arbor Drive
San Diego, CA 92103
619.632.2883

ARCHITECT / ENGINEER OF RECORD

NOT FOR CONSTRUCTION

PROJECT

MALAGA CWD - WATER TREATMENT PLANT

3749 S MAPLE AVE
FRESNO, CA 93725

NO.	REVISION	DATE

DATE: 07.14.23

SHEET TITLE

THREE LINE DIAGRAM

SHEET NO.:

E-2.1

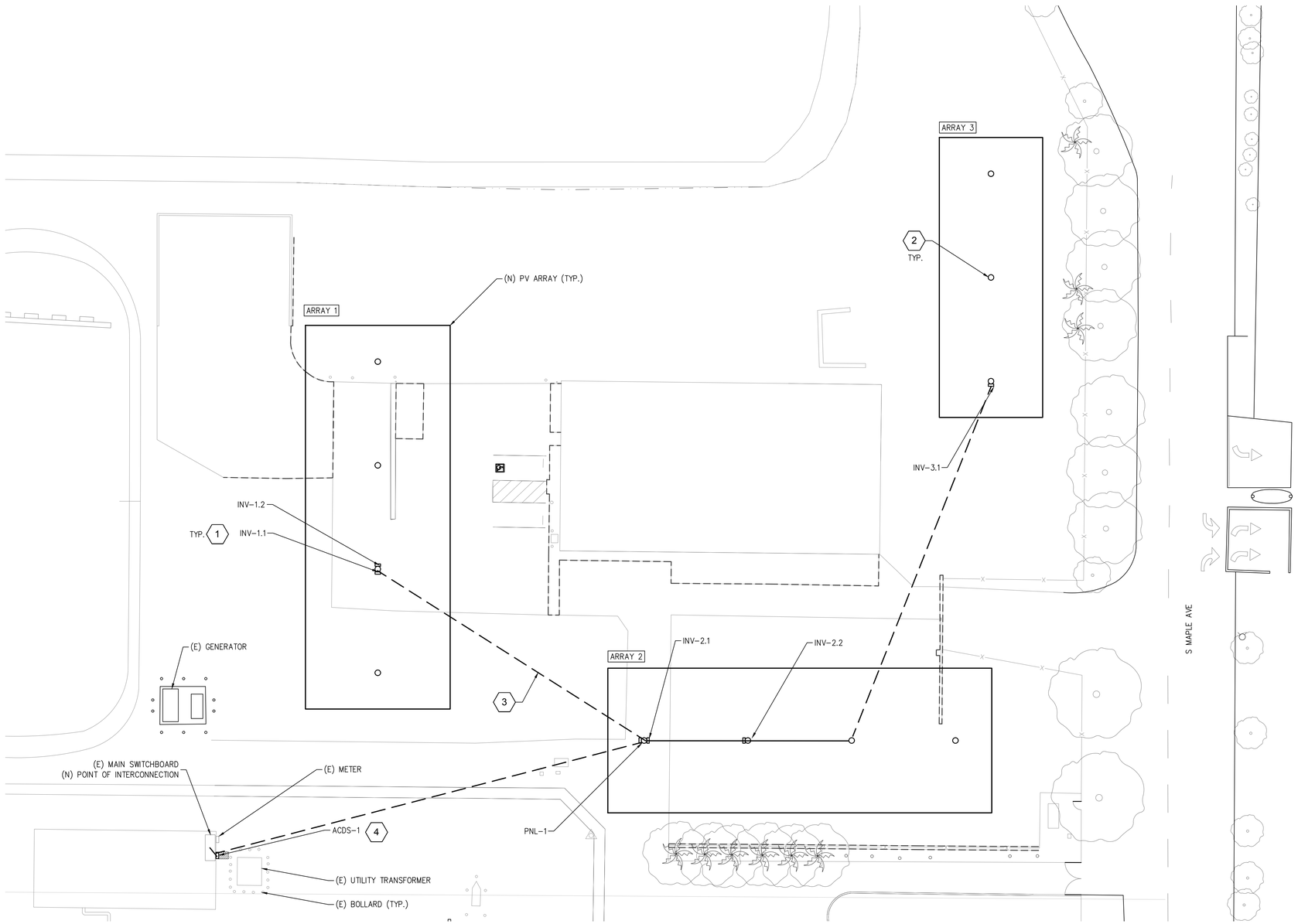

1 E-3.0 ELECTRICAL SITE PLAN

SCALE: 1" = 20'-0"

0 20' 40'

1" = 20'-0"

N

GENERAL NOTES

1. INSTALLATION SHALL BE IN ACCORDANCE WITH THE LATEST ADOPTED NEC AND NESC CODES AND STANDARDS AND SHALL CONFORM WITH INDUSTRY BEST PRACTICES AND IEEE RECOMMENDATIONS. THE AHJ HAS FINAL JURISDICTIONAL AUTHORITY ON CODE APPLICATION AND COMPLIANCE.
2. ALL EQUIPMENT SHALL BE APPROVED BY OWNER.
3. ALL INVERTER WIRING AND GROUNDING METHODS SHALL CONFORM TO THE MANUFACTURER'S RECOMMENDED PRACTICES.
4. INSTALL PULL ROPES IN EMPTY CONDUITS. USE MONOFILIMENT PLASTIC LINE WITH NOT LESS THAN 200LB TENSILE STRENGTH. LEAVE AT LEAST 12" OF SLACK AT EACH END OF THE PULL WIRE.
5. WIRE SHALL BE INSTALLED IN APPROVED RACEWAYS FOR ITS' INTENDED USE. ADEQUATELY STRAP AND SUPPORT ALL RACEWAYS. IN GENERAL, SUPPORT ALL CONDUIT WITHIN THREE (3) FEET OF OUTLET BOX, PANEL, OR ENCLOSURE, AND MAXIMUM TEN (10) FEET THEREAFTER. LFMC AND MC-PVC JACKETED CABLE WITHIN (1) FEET AND (4.5) FEET ADEQUATELY. RACEWAYS TO BE LISTED FOR WET LOCATIONS.
6. ALL EQUIPMENT SHALL BE LOCKABLE OR GUARDED AGAINST ACCESS BY UNQUALIFIED PERSONS.
7. NO CABLE TRAYS SHALL BE INSTALLED
8. EXPOSED NON-CURRENT CARRYING METAL PARTS OF ALL EQUIPMENT AND ENCLOSURES SHALL BE GROUNDED IN ACCORDANCE WITH NEC 250.134 AND 250.136(A). GROUND INVERTER IN ACCORDANCE WITH LISTING.
9. NO PART OF THIS DRAWING OR SPECIFICATIONS IS INTENDED TO ALLOW A VIOLATION OF PHYSICAL WORKING SPACE REQUIREMENTS AROUND ELECTRICAL EQUIPMENT AS REQUIRED BY NEC 110.26
10. ALL EQUIPMENT SHALL HAVE ARC FLASH WARNING LABELS WITH APPLICABLE INCIDENT ENERGY LEVELS, WORKING DISTANCES, AND REQUIRED PPE IN ACCORDANCE WITH NFPA 70E.
11. CONDUIT ROUTING IS DIAGRAMMATIC IN NATURE. EXACT ROUTING SHALL BE COORDINATED BY THE CONTRACTOR. CONTRACTOR IS RESPONSIBLE FOR LOCATING ALL UNDERGROUND INTERFERENCES AND AVOIDING AS NECESSARY.
12. REFER TO SHEET(S) E-2.X FOR CONDUIT AND FEEDER SPECIFICATIONS
    REFER TO SHEET(S) E-7.X FOR ELECTRICAL DETAILS
    REFER TO SHEET(S) E-9.X FOR EQUIPMENT LABELING
13. PV MODULES ARE NOT SHOWN FOR CLARITY. REFER TO ELECTRICAL ARRANGEMENT SHEETS FOR WIRING DETAILS
14. PULL-BOX TRAFFIC RATINGS SHALL BE DETERMINED IN FIELD BY CONTRACTOR, AS APPLICABLE PER LOCATION

KEYED NOTES:

1. INVERTERS TO BE INSTALLED ON THE COLUMN ON CANOPY STRUCTURE AT THE MAX HEIGHT, TO LIMIT ACCESS TO UNAUTHORIZED PERSONNEL. MIN 8'-0" MOUNTING HEIGHT IS RECOMMENDED, OTHERWISE PROTECTING GUARD SHALL BE INSTALLED OVER INVERTER DISCONNECTING MEANS. SEE SHEET **1/E-7.1** AND INSTALLATION MANUAL FOR EXACT DIMENSIONS OF ACCESS, AND MOUNTING DETAILS.
2. INSTALL CONCRETE-ENCASED ELECTRODE IN ACCORDANCE WITH NEC 250.52(A)(3)(2) CONSISTING OF #4 AWG BARE COPPER AT LEAST 20 FEET LONG, OR INSTALL ONE OR MORE GROUND RODS, MIN TOTAL LENGTH 20 FEET IN ACCORDANCE WITH NEC 250.52(A)(3)(1); MIN ONE PER EACH SEPARATE CANOPY STRUCTURE AT THE CENTER COLUMN. REFERENCE DETAIL 5/E-7.0. ALL GND CONNECTIONS SHALL BE MADE USING UL LISTED IRREVERSIBLE COMPRESSION CONNECTOR OR EXOTHERMIC WELD PROCESS AS APPLICABLE; MECHANICAL GND CONNECTORS CAN BE APPROVED FOR AN ABOVEGROUND CONNECTIONS
    CONTRACTOR TO VERIFY ELECTRODE RESISTANCE TO THE GROUND BY 3-POINT TESTING METHOD. THIS RESISTANCE SHALL NOT EXCEED 5Ω.
    SUPPLEMENTARY ELECTRODES FOR ARRAY GROUNDING SHALL BE INSTALLED IN ACCORDANCE WITH NEC 250.54, 250.52 AND 690.47.
3. INSTALL (1) 1"C COMMUNICATION CONDUIT BETWEEN CANOPIES UP TO THE **"DAS ENCLOSURE"**.
4. CONTRACTOR SHALL INSTALL UTILITY AC DISCONNECT WITHIN 10 FEET AND LINE OF SIGHT OF (E) UTILITY METER WHERE PRACTICABLE. ALTERNATIVE LOCATIONS MUST BE PROPOSED TO THE ENGINEER OF RECORD, AND WRITTEN UTILITY APPROVAL MUST BE OBTAINED PRIOR TO INSTALLATION OF THE DISCONNECT.

LEGEND

- - - - - - UNDERGROUND FEEDER

——— ABOVE GROUND FEEDER

SYSTEM HOST

MALAGA COUNTY WATER DISTRICT — SERVING HOME AND INDUSTRY

3580 S. FRANK ST
FRESNO, CA 93725
559-485-7353

SYSTEM DEVELOPER

sitelogiQ

1512 SILICA AVE
SACRAMENTO, CA 95815
916-988-8808

ELECTRICAL CONSTRUCTORS AND ENGINEERS

BLYMYER ENGINEERS

1101 MARINA VILLAGE PKWY
ALAMEDA, CA 94501
510-521-3773

STRUCTURAL ENGINEERING AND STEEL CONSTRUCT

TEICHERT SOLAR

10620 TREENA STREET, STE 140
SAN DIEGO, CA 92131
562-283-2970

ARCHITECT OF RECORD

M M P V d e s i g n

Mariana Moncada, Architect
718 West Arbor Drive
San Diego, CA 92103
619.632.2883

ARCHITECT / ENGINEER OF RECORD

NOT FOR CONSTRUCTION

PROJECT

MALAGA CWD - WATER TREATMENT PLANT

3749 S MAPLE AVE
FRESNO, CA 93725

NO.	REVISION	DATE

DATE: 07.14.23

SHEET TITLE

ELECTRICAL SITE PLAN

SHEET NO.:

E-3.0

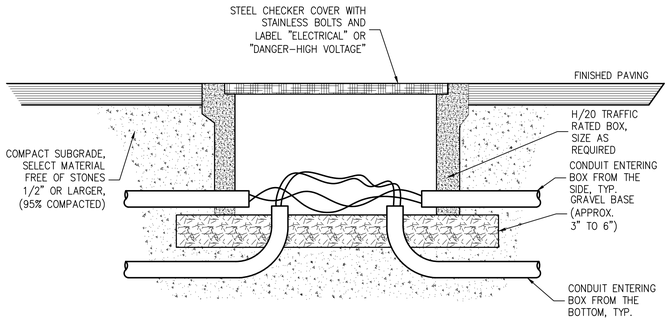

1 - TRAFFIC RATED PULLBOX

SCALE: 1/2" = 1'-0"

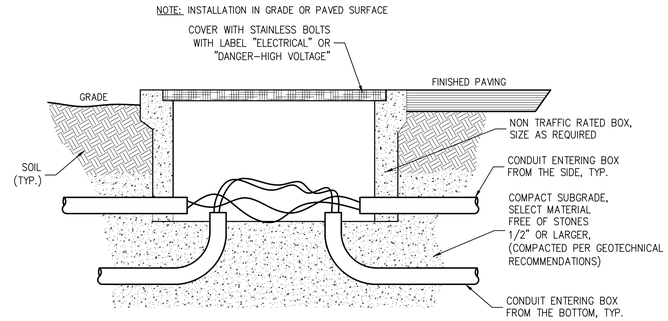

2 - NON-TRAFFIC RATED PULL BOX

SCALE: 1/2" = 1'-0"

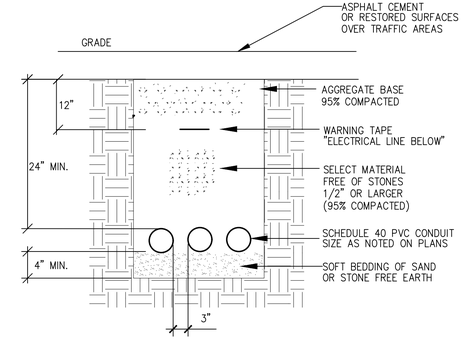

3 - LV TRENCHING DETAIL - OVER TRAFFIC

SCALE: 1/2" = 1'-0"

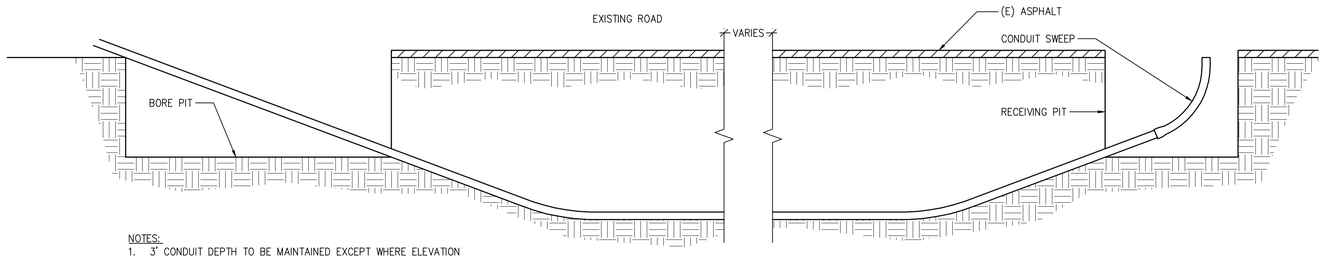

NOTES:

1. 3' CONDUIT DEPTH TO BE MAINTAINED EXCEPT WHERE ELEVATION CHANGES ARE REQUIRED TO AVOID OBSTACLES.
2. LOCATING SERVICE SHALL BE USED ALONG PROPOSED ROUTE. ALL OBSTRUCTIONS SHALL BE POTHOLED TO DETERMINE DEPTH AND LOCATION.
3. BORE AND RECEIVING PIT SHALL BE FILLED. BACKFILL SHOULD BE PLACED IN HORIZONTAL LIFTS AND COMPACTED TO 85% RELATIVE COMPACTION, AS EVALUATED BY ASTM D698. AGGREGATE BASE AND THE UPPER 12" OF SUBGRADE BENEATH PAVEMENT AREAS SHOULD BE COMPACTED TO 95% RELATIVE COMPACTION, AS EVALUATED BY ASTM D698. FINISH SURFACES SHALL MATCH EXISTING.
4. CONDUIT SWEEP TO BE INSTALLED AT ENDS AFTER BORING IS COMPLETE

4 - DIRECTIONAL BORING DETAIL

SCALE: NTS

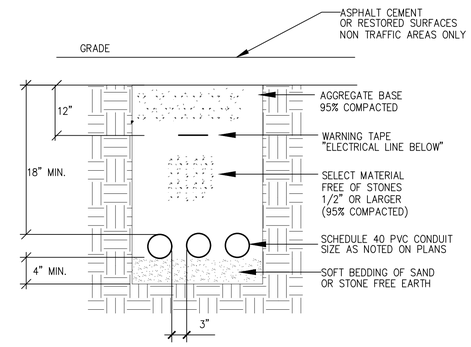

5 - LV TRENCHING DETAIL - NOT OVER TRAFFIC

SCALE: 1/2" = 1'-0"

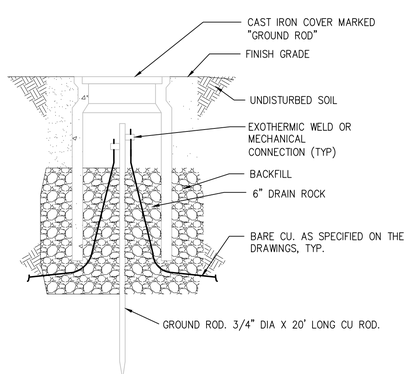

6 - GROUND ROD INSPECTION WELL

SCALE: NTS

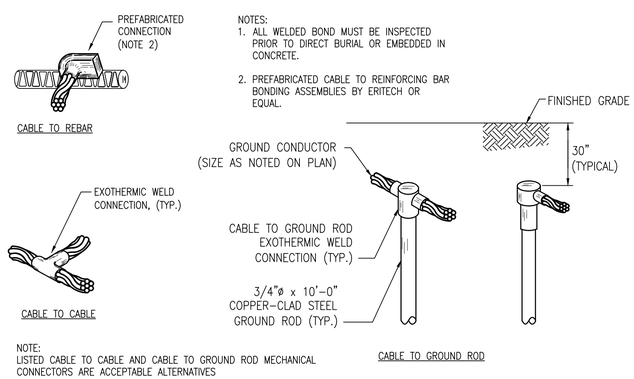

7 - WELDED GROUNDING CONNECTION DETAILS

SCALE: NTS

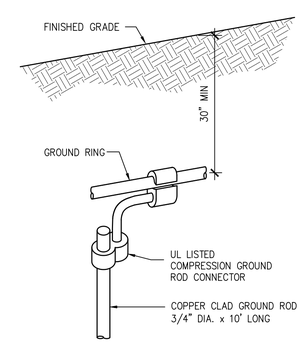

8 - BURIED GROUND ROD DETAIL (ALTERNATE)

SCALE: NTS

SYSTEM HOST

MALAGA COUNTY WATER DISTRICT — SERVING HOME AND INDUSTRY

3580 S. FRANK ST
FRESNO, CA 93725
559-485-7353

SYSTEM DEVELOPER

sitelogiQ

1512 SILICA AVE
SACRAMENTO, CA 95815
916-988-8808

ELECTRICAL CONSTRUCTORS AND ENGINEERS

BLYMYER ENGINEERS

1101 MARINA VILLAGE PKWY
ALAMEDA, CA 94501
510-521-3773

STRUCTURAL ENGINEERING AND STEEL CONSTRUCT

TEICHERT SOLAR

10620 TREENA STREET, STE 140
SAN DIEGO, CA 92131
562-283-2970

ARCHITECT OF RECORD

M M P V d e s i g n

Mariana Moncada, Architect
718 West Arbor Drive
San Diego, CA 92103
619.632.2883

ARCHITECT / ENGINEER OF RECORD

NOT FOR CONSTRUCTION

PROJECT

MALAGA CWD - WATER TREATMENT PLANT

3749 S MAPLE AVE
FRESNO, CA 93725

NO.	REVISION	DATE

DATE: 07.14.23

SHEET TITLE

ELECTRICAL DETAILS

SHEET NO.:

E-7.0

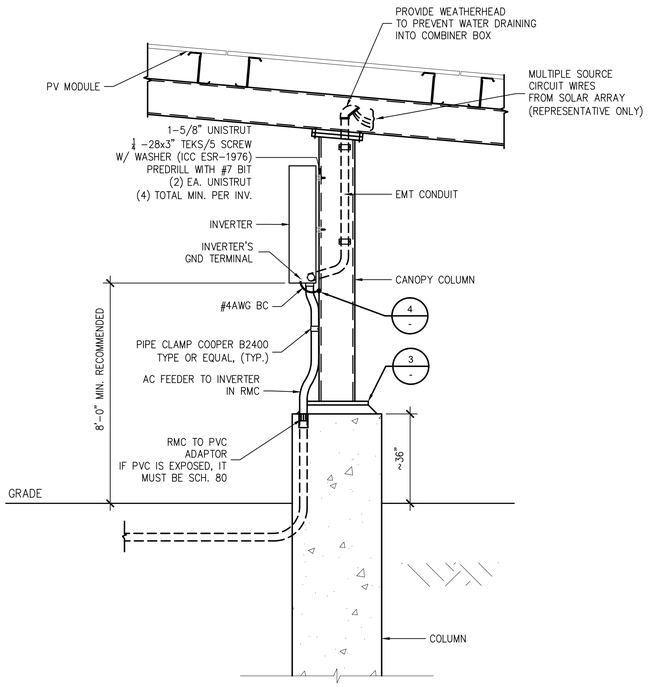

1 - INVERTER MOUNTING DETAIL

SCALE: 1/2" = 1'-0"

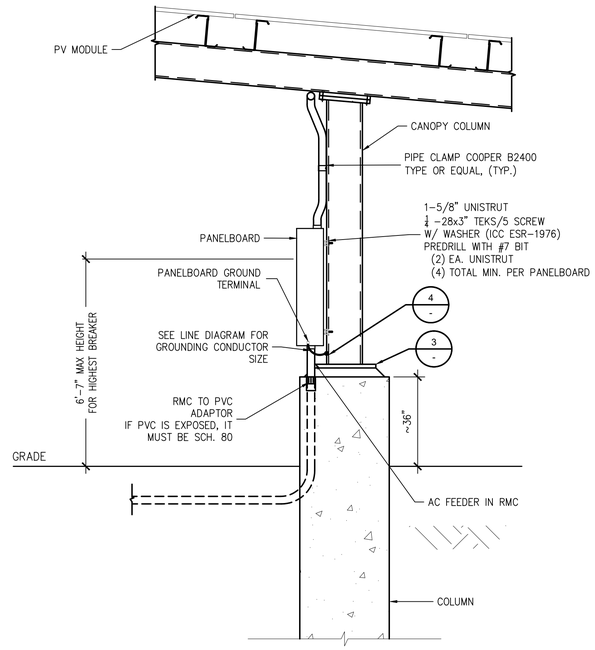

2 - PANELBOARD MOUNTING DETAIL

SCALE: 1/2" = 1'-0"

NOTE:
1. SEE E-3.0 FOR GROUNDED COLUMN LOCATIONS
2. INSTALLERS SHALL CAN USE EITHER OPTIONS TO GROUND THE CANOPY COLUMN
3. ANY GROUNDING CONDUCTOR TO CONDUCTOR CONNECTIONS MUST BE MADE WITH LISTED CABLE TO CABLE MECHANICAL CONNECTORS,

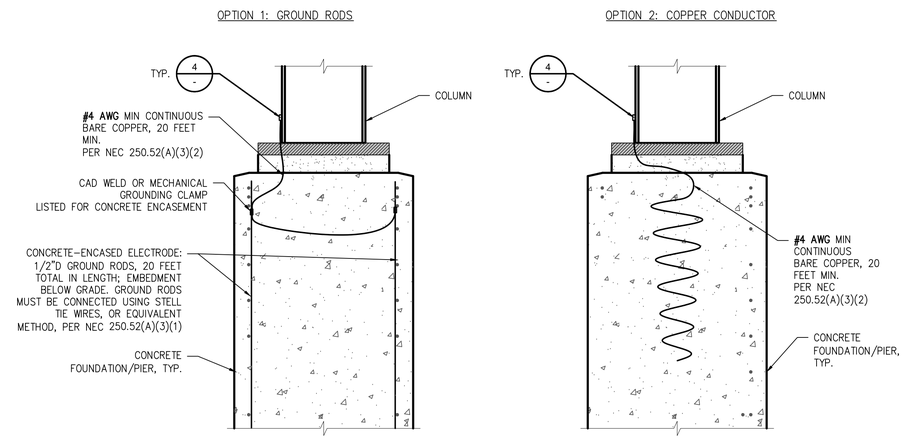

3 - TYPICAL CANOPY COLUMN GROUNDING

SCALE: NTS

NOTES:
1. INSTALLERS MAY CHOOSE ANY ONE OF THESE OPTIONS FOR CONDUCTOR TO STRUCTURE GROUNDING CONNECTIONS.
2. GROUNDING CONNECTION SHALL COMPLY WITH NEC 250.8(A).
3. WELDS SHALL BE COVERED WITH 'COLD GALVANIZING' COMPOUND.

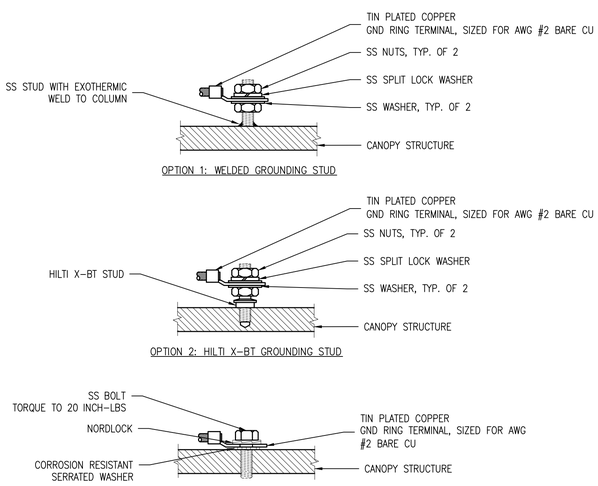

4 - TYPICAL GROUNDED CONDUCTOR TO STRUCTURE ATTACHMENT

SCALE: NTS

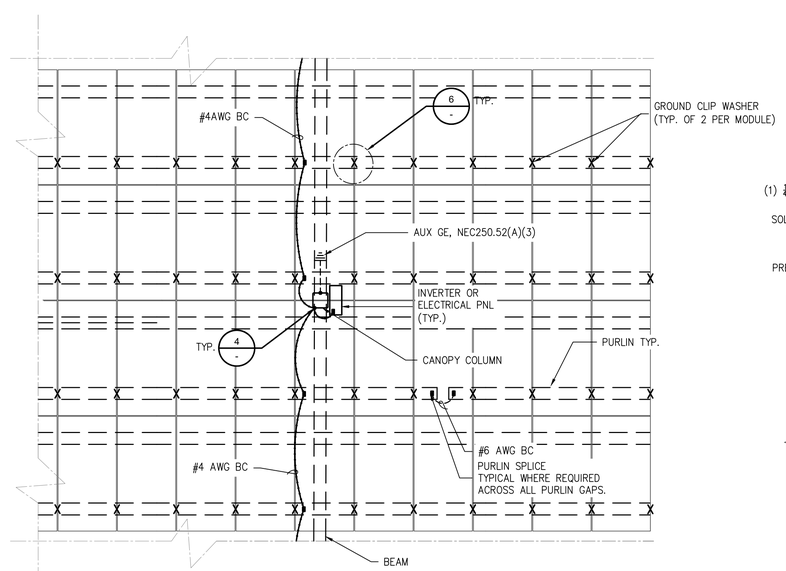

5 - TYPICAL MODULE GROUNDING PLAN

SCALE: NTS

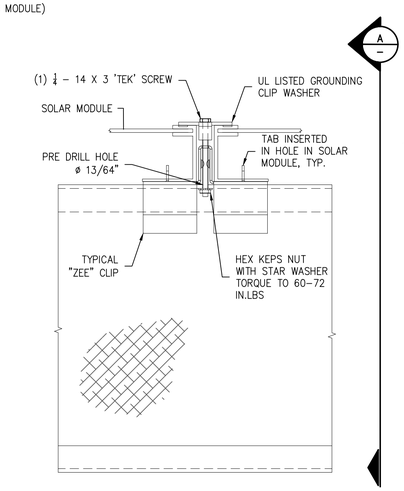

6 - TYPICAL MODULE GROUNDING DETAIL

SCALE: NTS

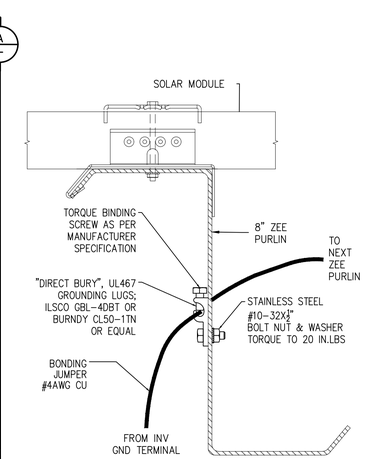

A - PURLIN SECTION A

SCALE: NTS

SYSTEM HOST

MALAGA COUNTY WATER DISTRICT
SERVING HOME AND INDUSTRY

3580 S. FRANK ST
FRESNO, CA 93725
559-485-7353

SYSTEM DEVELOPER

sitelogiQ

1512 SILICA AVE
SACRAMENTO, CA 95815
916-988-8808

ELECTRICAL CONSTRUCTORS AND ENGINEERS

BLYMYER ENGINEERS

1101 MARINA VILLAGE PKWY
ALAMEDA, CA 94501
510-521-3773

STRUCTURAL ENGINEERING AND STEEL CONSTRUCT

TEICHERT SOLAR

10620 TREENA STREET, STE 140
SAN DIEGO, CA 92131
562-283-2970

ARCHITECT OF RECORD

M M P V d e s i g n

Mariana Moncada, Architect
718 West Arbor Drive
San Diego, CA 92103
619.632.2883

ARCHITECT / ENGINEER OF RECORD

NOT FOR CONSTRUCTION

PROJECT

MALAGA CWD - WATER TREATMENT PLANT

3749 S MAPLE AVE
FRESNO, CA 93725

NO.	REVISION	DATE

DATE: 07.14.23

SHEET TITLE

ELECTRICAL DETAILS

SHEET NO.:

E-7.1

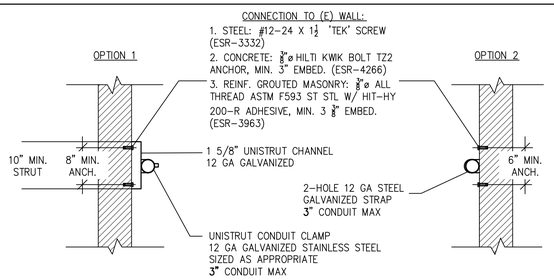

NOTES:
1. ALL CHANGES TO THE LISTED CONNECTION SPECS MUST BE SUBMITTED TO DSA VIA CCD
2. EMT, RGS, CONDUIT SHALL BE SUPPORTED WITHIN (3) FEET OF ANY ENCLOSURE, AND MAXIMUM (10) ON CENTER THEREAFTER. LFMC AND MC-PVC JACKETED CABLE WITHIN (1) FEET AND (4.5) FEET.
3. POST-INSTALLED MASONRY ANCHORS SHALL BE ASTM F593 STAINLESS STEEL ALL THREAD RODS SET IN HILTI HIT-HY 200 ADHESIVE CONFORMING TO ICC ESR 3963.
4. ANCHOR INSTALLATION SHALL BE OBSERVED BY THE PROJECT INSPECTOR OF RECORD FOR COMPLIANCE WITH THE MANUFACTURER'S INSTALLATION INSTRUCTIONS.
5. ANCHORS SHALL BE TENSION TESTED BY THE TESTING LABORATORY IN COMPLIANCE WITH CBC 1910A.5.2:
   - 5.1 TEST FREQUENCY: 10%
   - 5.2 TENSION TEST VALUES: TENSION TEST ANCHORS TO 1400 lbf.
   - 5.3 TEST ACCEPTANCE: ANCHORS SHALL MAINTAIN THE TEST LOAD FOR A MINIMUM OF 15 SECONDS AND SHALL EXHIBIT NO DISCERNIBLE MOVEMENT DURING THE TENSION TEST (E.G. LOOSENING OF THE WASHER UNDER THE NUT).
   - 5.4 IF ANY ANCHOR FAILS TESTING, ALL ANCHORS OF THE SAME TYPE, NOT PREVIOUSLY TESTED, WHICH WERE INSTALLED BY THE SAME TRADE SHALL BE TESTED UNTIL TWENTY (20) CONSECUTIVE ANCHORS PASS, THEN RESUME NORMAL FREQUENCY.

1 CONDUIT SUPPORT
SCALE: NTS

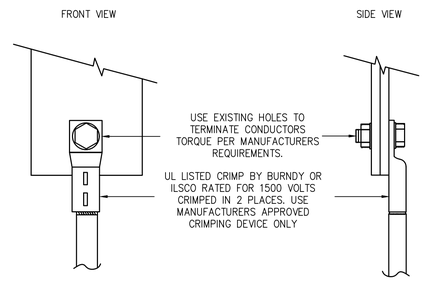

2 PANEL INTERCONNECTION
SCALE: NTS

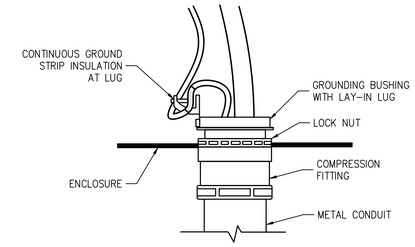

3 METAL CONDUIT GROUNDING
SCALE: NTS

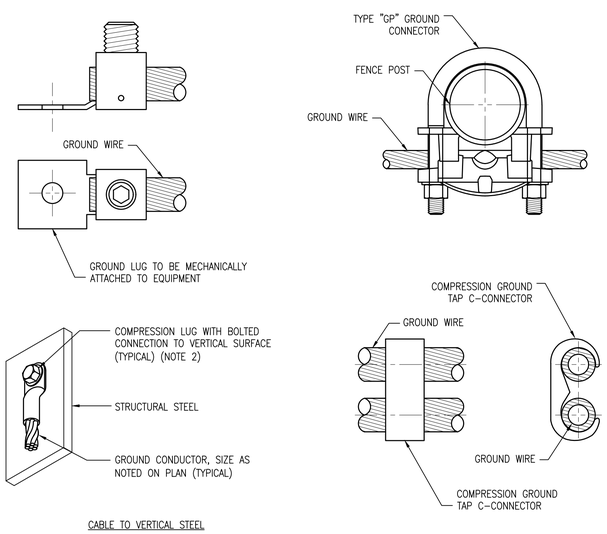

4 MECHANICAL GROUNDING CONNECTION DETAILS
SCALE: NTS

SYSTEM HOST

MALAGA COUNTY WATER DISTRICT — SERVING HOME AND INDUSTRY

3580 S. FRANK ST
FRESNO, CA 93725
559-485-7353

SYSTEM DEVELOPER

sitelogiQ

1512 SILICA AVE
SACRAMENTO, CA 95815
916-988-8808

ELECTRICAL CONSTRUCTORS AND ENGINEERS

BLYMYER ENGINEERS

1101 MARINA VILLAGE PKWY
ALAMEDA, CA 94501
510-521-3773

STRUCTURAL ENGINEERING AND STEEL CONSTRUCT

TEICHERT SOLAR

10620 TREENA STREET, STE 140
SAN DIEGO, CA 92131
562-283-2970

ARCHITECT OF RECORD

M M P V d e s i g n

Mariana Moncada, Architect
718 West Arbor Drive
San Diego, CA 92103
619.632.2883

ARCHITECT / ENGINEER OF RECORD

NOT FOR CONSTRUCTION

PROJECT

MALAGA CWD - WATER TREATMENT PLANT

3749 S MAPLE AVE
FRESNO, CA 93725

NO.	REVISION	DATE

DATE: 07.14.23

SHEET TITLE

ELECTRICAL DETAILS

SHEET NO.:

E-7.2

4"

3"

PHOTOVOLTAIC DC DISCONNECT

WARNING!

ELECTRICAL SHOCK HAZARD. DO NOT TOUCH TERMINALS.
TERMINALS ON BOTH THE LINE AND LOAD SIDES MAY BE
ENERGIZED IN THE OPEN POSITION.

MAX. SYSTEM VOLTAGE (Voc):	(*) V
MAX. POWER VOLTAGE (Vmp):	(*) V
MAX. CIRCUIT CURRENT (Isc):	(*) A
MAX. POWER CURRENT (Imp):	(*) A

DC SYSTEM VALUES

NUMBER OF MODULES PER STRING	15	16	17		18
MAX. SYSTEM VOLTAGE (Voc)	792.3	845.1	897.9		950.8
MAX. POWER VOLTAGE (Vmp)	619.5	660.8	702.1		743.4
NUMBER OF STRINGS PER MPPT	2	3	2	3	2
MAX. CIRCUIT CURRENT (Isc)	30.8	46.2	30.8	46.2	30.8
MAX. POWER CURRENT (Imp)	28.8	43.2	28.8	43.2	28.8

NOTES:

1. PLACE SIGN ADJACENT TO COMBINER BOX DISCONNECT SWITCH.
2. RED BACKGROUND, WHITE LETTERING
3. TEXT: 0.16", .25", AND 0.08" HEIGHT, ALL CAPITAL LETTERS ARIAL OR SIMILAR FONT, NON-BOLD
4. MATERIAL: TEXT PRINTED ON ALUMINUM BACKING WITH UV-RATED PLASTIC LAMINATE COATING AND OUTDOOR RATED ADHESIVE.
5. MAXIMUM TOTAL CURRENT AND VOLTAGE VALUES VARY BETWEEN MPPTS. REFER TO DC SYSTEM TABLE FOR EXACT VALUES.
6. APPLICABLE NEC SECTIONS: 690.15 AND 690.53

1 - PV SYSTEM SOURCE DC DISCONNECT

SCALE: NTS

1½"

ID-XY

EQUIPMENT LABELS

EQUIPMENT NAME	ID
PANEL	PNL-1
PV INVERTER	INV-#
AC DISCONNECT	ACDS-1

2 - EQUIPMENT LABEL

SCALE: NTS

6"

1.5"

INVERTER OUTPUT PANEL

DO NOT ADD LOAD

NOTE:

1. INVERTER IDENTIFICATION LABEL
2. BLACK BACKGROUND
3. WHITE LETTERING
4. MATERIAL NOTE: ENGRAVED ON OUTDOOR-RATED PLASTIC LAMINATE WITH ADHESIVE BACKING SUITABLE ENVIRONMENT.
5. SHANNON OR SIMILAR FONT, NON-BOLD

3 - INVERTER PANELBOARD LABEL

SCALE: NTS

(6½")

1"

WARNING: PHOTOVOLTAIC POWER SOURCE

NOTES:

1. PLACE LABEL ON: EXPOSED DC CONDUIT, RACEWAYS, CABLE TRAYS, AND OTHER WIRING METHODS. COVERS OR ENCLOSURES OF PULL BOXES AND JUNCTION BOXES. SPACING BETWEEN LABELS NOT TO EXCEED 10 FT.
2. RED BACKGROUND, WHITE LETTERING
3. TEXT: MIN. 3/8" HEIGHT, ALL CAPITAL LETTERS, ARIAL OR SIMILAR FONT, NON-BOLD
4. MATERIAL: REFLECTIVE, WEATHER AND UV RESISTANT WITH DURABLE ADHESIVE SUITABLE FOR THE ENVIRONMENT.
5. NEC 690.31(B) AND (G)

4 - PV SOURCE ENCLOSURE AND RACEWAY LABEL

SCALE: NTS

4"

2"

PHOTOVOLTAIC AC DISCONNECT

WARNING!

ELECTRICAL SHOCK HAZARD. DO NOT TOUCH TERMINALS.
TERMINALS ON BOTH THE LINE AND LOAD SIDES MAY BE
ENERGIZED IN THE OPEN POSITION.

MAX. OPERATING VOLTAGE:	480V
MAX. OPERATING CURRENT:	72.2A/ POLE

NOTES:

1. PLACE SIGN ON OR ADJACENT TO INVERTER AC DISCONNECT.
2. RED BACKGROUND, WHITE LETTERING
3. TEXT: 0.25", 0.16", AND 0.08" HEIGHT, ALL CAPITAL LETTERS ARIAL OR SIMILAR FONT, NON-BOLD
4. MATERIAL: TEXT PRINTED ON ALUMINUM BACKING WITH UV-RATED PLASTIC LAMINATE COATING AND OUTDOOR RATED ADHESIVE.
5. NEC 690.15

5 - PV INVERTER AC DISCONNECT

SCALE: NTS

4"

2"

PHOTOVOLTAIC SYSTEM
MAIN AC DISCONNECT

WARNING!

ELECTRICAL SHOCK HAZARD. DO NOT TOUCH TERMINALS.
TERMINALS ON BOTH THE LINE AND LOAD SIDES MAY BE
ENERGIZED IN THE OPEN POSITION.

MAX. OPERATING VOLTAGE:	480V
MAX. OPERATING CURRENT:	361A/ POLE

4"

1"

SERVICE RATED
EQUIPMENT

NOTES:

1. PLACE SIGN ON OR ADJACENT TO UTILITY AC DISCONNECT (NEC 690.13)
2. RED BACKGROUND, WHITE LETTERING
3. TEXT: 0.25", 0.16", AND 0.08" HEIGHT, ALL CAPITAL LETTERS ARIAL OR SIMILAR FONT, NON-BOLD
4. MATERIAL: TEXT PRINTED ON ALUMINUM BACKING WITH UV-RATED PLASTIC LAMINATE COATING AND OUTDOOR RATED ADHESIVE.

6 - PV SYSTEM UTILITY AC DISCONNECT

SCALE: NTS

5"

1"

CAUTION: SOLAR ELECTRIC SYSTEM CONNECTED

NOTE:

1. LOCATED AT POINT OF INTERCONNECTION
2. RED BACKGROUND, WHITE LETTERING, MINIMUM 3/8" LETTER HEIGHT
3. ALL CAPITAL LETTERS
4. REFLECTIVE WEATHER RESISTANT MATERIAL SUITABLE FOR THE ENVIRONMENT. (DURABLE ADHESIVE MATERIALS MAY MEET THIS REQUIREMENT)

7 - MARKING FOR MAIN SERVICE POI

SCALE: NTS

3"

1"

WARNING!

DO NOT REPLACE FUSES WHILE THE
CIRCUIT IS ENERGIZED.

NOTES:

1. PLACE LABEL ADJACENT TO INVERTER AND FUSIBLE AC DISCONNECT.
2. RED BACKGROUND, WHITE LETTERING
3. TEXT: MIN. 0.25" AND 0.08" HEIGHT, ALL CAPITAL LETTERS ARIAL OR SIMILAR FONT, NON-BOLD
4. MATERIAL: REFLECTIVE, WEATHER AND UV RESISTANT WITH DURABLE ADHESIVE SUITABLE FOR THE ENVIRONMENT.

8 - FUSE WARNING SIGN

SCALE: NTS

(4")

(4")

WARNING

ARC FLASH AND SHOCK HAZARD PRESENT
APPROPRIATE PPE REQUIRED

[IN]- FLASH HAZARD BOUNDARY
[CAL/CM^2] - FLASH HAZARD AT 18"

REQUIRED PPE: ###

KVAC SHOCK HAZARD WHEN COVER REMOVED
GLOVE CLASS
[FT] LIMITED APROACH
[FT] RESTRICTED APPROACH

EQUIPMENT ID - ####

3749 S MAPLE AVE
FRESNO, CA 93725

BLYMYER ENGINEERS
MM/DD/YYY

(4")

(4")

DANGER

ARC FLASH AND SHOCK HAZARD PRESENT
APPROPRIATE PPE REQUIRED

[IN]- FLASH HAZARD BOUNDARY
[CAL/CM^2] - FLASH HAZARD AT 18"

REQUIRED PPE: ###

KVAC SHOCK HAZARD WHEN COVER REMOVED
GLOVE CLASS
[FT] LIMITED APROACH
[FT] RESTRICTED APPROACH

EQUIPMENT ID - ####

3749 S MAPLE AVE
FRESNO, CA 93725

BLYMYER ENGINEERS
MM/DD/YYY

NOTES:

1. RED BACKGROUND & WHITE LETTERING
2. TEXT HEIGHT: 3/8", 1/8" & ALL CAPITAL LETTERS
3. REFLECTIVE WEATHER RESISTANT MATERIAL SUITABLE FOR THE ENVIRONMENT.
4. MARKING FOR EACH INVERTER, PANELBOARD, SWITCHBOARD, DISCONENCT, AND POINT OF INTERCONNECTION

9 - ARC FLASH HAZARD WARNING

SCALE: NTS

xref L:\Acad\2022dwg\222070-BFL-Malaga_CWD_CA\01-CAD\WWTP\xref\X-SITE-MW.dwg

SYSTEM HOST

MALAGA COUNTY WATER DISTRICT
SERVING HOME AND INDUSTRY

3580 S. FRANK ST
FRESNO, CA 93725
559-485-7353

SYSTEM DEVELOPER

sitelogiQ

1512 SILICA AVE
SACRAMENTO, CA 95815
916-988-8808

ELECTRICAL CONSTRUCTORS AND ENGINEERS

BLYMYER ENGINEERS

1101 MARINA VILLAGE PKWY
ALAMEDA, CA 94501
510-521-3773

STRUCTURAL ENGINEERING AND STEEL CONSTRUCT

TEICHERT SOLAR

10620 TREENA STREET, STE 140
SAN DIEGO, CA 92131
562-283-2970

ARCHITECT OF RECORD

M M P V d e s i g n

Mariana Moncada, Architect
718 West Arbor Drive
San Diego, CA 92103
619.632.2883

ARCHITECT / ENGINEER OF RECORD

NOT FOR CONSTRUCTION

PROJECT

MALAGA CWD - WATER TREATMENT PLANT

3749 S MAPLE AVE
FRESNO, CA 93725

NO.	REVISION	DATE

DATE:

07.14.23

SHEET TITLE

WARNING LABELS

SHEET NO.:

E-9.0

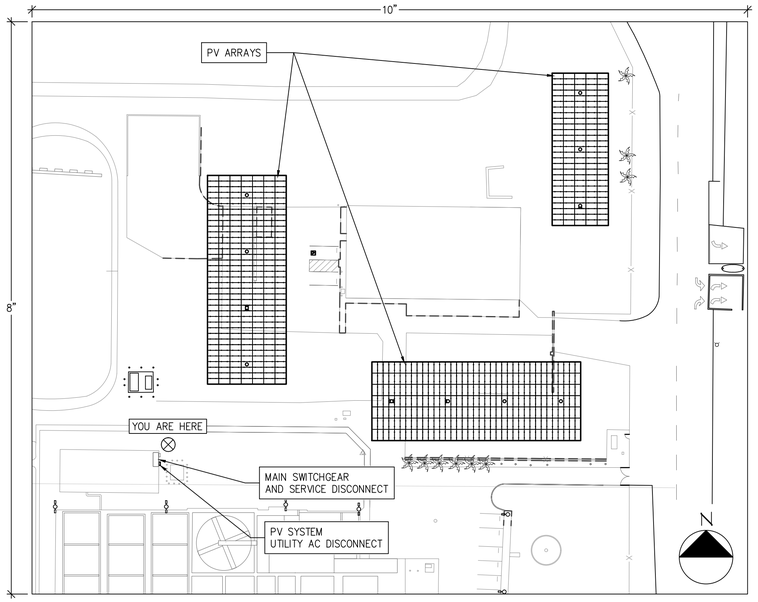

NOTES:

1. PLACE POWER SOURCE DIRECTORY AT MAIN SWITCHGEAR AND ACDS-1.
2. TEXT: MIN. 3/8" AND 1/4" HEIGHT, ALL CAPITAL LETTERS ARIAL OR SIMILAR FONT, NON-BOLD
3. MATERIAL: WEATHER AND UV RESISTANT VINYL WITH DURABLE ADHESIVE SUITABLE FOR THE ENVIRONMENT.

1 / - POWER SOURCE DIRECTORY
SCALE: 1:1

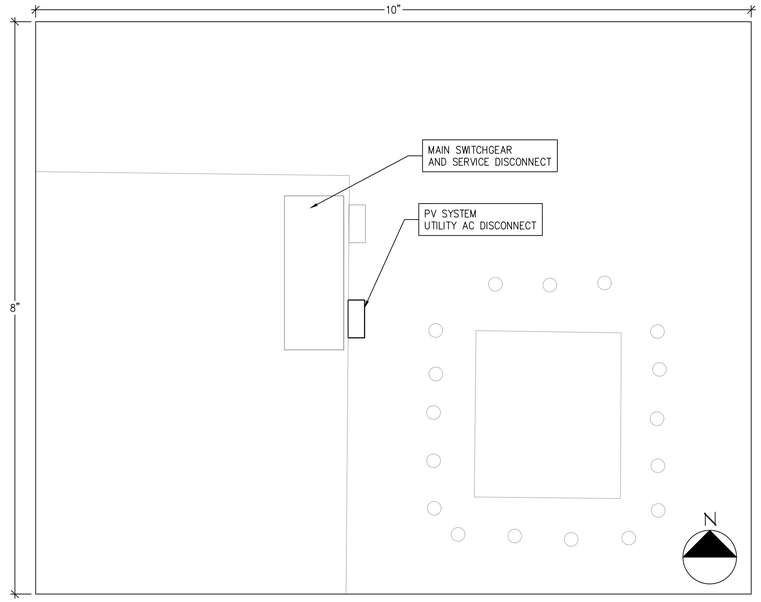

NOTES:

1. PLACE POWER SOURCE DIRECTORY AT MAIN SWITCHGEAR AND AC DISCONNECT.
2. TEXT: MIN. 3/8" AND 1/4" HEIGHT, ALL CAPITAL LETTERS ARIAL OR SIMILAR FONT, NON-BOLD
3. MATERIAL: WEATHER AND UV RESISTANT VINYL WITH DURABLE ADHESIVE SUITABLE FOR THE ENVIRONMENT.

2 / - POWER SOURCE SITE DIRECTORY
SCALE: 1:1

SYSTEM HOST

MALAGA COUNTY WATER DISTRICT
SERVING HOME AND INDUSTRY

3580 S. FRANK ST
FRESNO, CA 93725
559-485-7353

SYSTEM DEVELOPER

sitelogiQ

1512 SILICA AVE
SACRAMENTO, CA 95815
916-988-8808

ELECTRICAL CONSTRUCTORS AND ENGINEERS

BLYMYER ENGINEERS

1101 MARINA VILLAGE PKWY
ALAMEDA, CA 94501
510-521-3773

STRUCTURAL ENGINEERING AND STEEL CONSTRUCT

TEICHERT SOLAR

10620 TREENA STREET, STE 140
SAN DIEGO, CA 92131
562-283-2970

ARCHITECT OF RECORD

M M P V d e s i g n

Mariana Moncada, Architect
718 West Arbor Drive
San Diego, CA 92103
619.632.2883

ARCHITECT / ENGINEER OF RECORD

NOT FOR CONSTRUCTION

PROJECT

MALAGA CWD - WATER TREATMENT PLANT

3749 S MAPLE AVE
FRESNO, CA 93725

NO.	REVISION	DATE

DATE:
07.14.23

SHEET TITLE

WARNING LABELS

SHEET NO.:

E-9.1

NEW

CanadianSolar

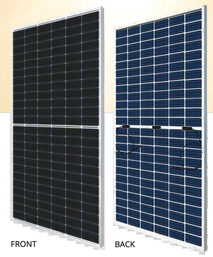

BiHiKu6

520 W ~ 545 W

BIFACIAL MONO PERC

CS6W-520|525|530|535|540|545MB-AG

MORE POWER

- 545 W — Module power up to 545 W; Module efficiency up to 21.2 %
- Up to 12.3 % lower LCOE; Up to 5.2 % lower system cost
- Comprehensive LID / LeTID mitigation technology, up to 50% lower degradation
- Compatible with mainstream trackers, cost effective product for utility power plant
- Better shading tolerance

MORE RELIABLE

- Minimizes micro-crack impacts
- Heavy snow load up to 5400 Pa, wind load up to 2400 Pa*

* For detailed information, please refer to Installation Manual.

12 Years — **Enhanced Product Warranty on Materials and Workmanship***

30 Years — **Linear Power Performance Warranty***

1st year power degradation no more than 2%
Subsequent annual power degradation no more than 0.45%

*According to the applicable Canadian Solar Limited Warranty Statement.

MANAGEMENT SYSTEM CERTIFICATES*

ISO 9001:2015 / Quality management system
ISO 14001:2015 / Standards for environmental management system
ISO 45001: 2018 / International standards for occupational health & safety

PRODUCT CERTIFICATES*

IEC 61215 / IEC 61730 / CE / INMETRO / MCS / UKCA
CEC listed (US California)
UL 61730 / IEC 61701 / IEC 62716 / IEC 60068-2-68
Take-e-way

* The specific certificates applicable to different module types and markets will vary, and therefore not all of the certifications listed herein will simultaneously apply to the products you order or use. Please contact your local Canadian Solar sales representative to confirm the specific certificates available for your Product and applicable in the regions in which the products will be used.

CSI SOLAR (USA) CO., LTD. is committed to providing high quality solar photovoltaic modules, solar energy and battery storage solutions to customers. The company was recognized as the No. 1 module supplier for quality and performance/price ratio in the IHS Module Customer Insight Survey. Over the past 20 years, it has successfully delivered over 63 GW of premium-quality solar modules across the world.

CSI SOLAR (USA) CO., LTD.
1350 Treat Blvd. Suite 500, Walnut Creek, CA 94598, USA | www.csisolar.com/na | service.ca@csisolar.com

ENGINEERING DRAWING (mm)

Rear View

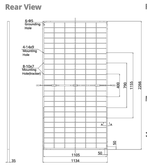

Frame Cross Section A-A

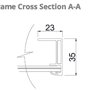

Mounting Hole

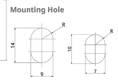

CS6W-530MB-AG / I-V CURVES

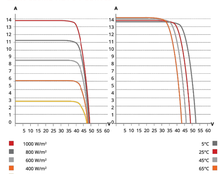

ELECTRICAL DATA | STC*

		Nominal Max. Power (Pmax)	Opt. Operating Voltage (Vmp)	Opt. Operating Current (Imp)	Open Circuit Voltage (Voc)	Short Circuit Current (Isc)	Module Efficiency
CS6W-520MB-AG		520 W	40.5 V	12.84 A	48.4 V	13.70 A	20.2%
Bifacial Gain**	5%	546 W	40.5 V	13.48 A	48.4 V	14.39 A	21.2%
	10%	572 W	40.5 V	14.12 A	48.4 V	15.07 A	22.3%
	20%	624 W	40.5 V	15.41 A	48.4 V	16.44 A	24.3%
CS6W-525MB-AG		525 W	40.7 V	12.90 A	48.6 V	13.75 A	20.4%
Bifacial Gain**	5%	551 W	40.7 V	13.55 A	48.6 V	14.44 A	21.4%
	10%	578 W	40.7 V	14.21 A	48.6 V	15.13 A	22.5%
	20%	630 W	40.7 V	15.48 A	48.6 V	16.50 A	24.5%
CS6W-530MB-AG		530 W	40.9 V	12.96 A	48.8 V	13.80 A	20.6%
Bifacial Gain**	5%	557 W	40.9 V	13.62 A	48.8 V	14.49 A	21.7%
	10%	583 W	40.9 V	14.26 A	48.8 V	15.18 A	22.7%
	20%	636 W	40.9 V	15.55 A	48.8 V	16.56 A	24.8%
CS6W-535MB-AG		535 W	41.1 V	13.02 A	49.0 V	13.85 A	20.8%
Bifacial Gain**	5%	562 W	41.1 V	13.68 A	49.0 V	14.54 A	21.9%
	10%	589 W	41.1 V	14.34 A	49.0 V	15.24 A	22.9%
	20%	642 W	41.1 V	15.62 A	49.0 V	16.62 A	25.0%
CS6W-540MB-AG		540 W	41.3 V	13.08 A	49.2 V	13.90 A	21.0%
Bifacial Gain**	5%	567 W	41.3 V	13.73 A	49.2 V	14.60 A	22.1%
	10%	594 W	41.3 V	14.39 A	49.2 V	15.29 A	23.1%
	20%	648 W	41.3 V	15.70 A	49.2 V	16.68 A	25.2%
CS6W-545MB-AG		545 W	41.5 V	13.14 A	49.4 V	13.95 A	21.2%
Bifacial Gain**	5%	572 W	41.5 V	13.80 A	49.4 V	14.65 A	22.3%
	10%	600 W	41.5 V	14.46 A	49.4 V	15.35 A	23.3%
	20%	654 W	41.5 V	15.77 A	49.4 V	16.74 A	25.5%

* Under Standard Test Conditions (STC) of irradiance of 1000 W/m², spectrum AM 1.5 and cell temperature of 25°C.
** Bifacial Gain: The additional gain from the back side compared to the power of the front side at the standard test condition. It depends on mounting (structure, height, tilt angle etc.) and albedo of the ground.

ELECTRICAL DATA

Operating Temperature	-40°C ~ +85°C
Max. System Voltage	1500 V (IEC/UL) or 1000 V (IEC/UL)
Module Fire Performance	TYPE 29 (UL 61730) or CLASS C (IEC61730)
Max. Series Fuse Rating	30 A
Application Classification	Class A
Power Tolerance	0 ~ + 10 W
Power Bifaciality*	70 %

* Power Bifaciality = $Pmax_{rear}$ / $Pmax_{front}$, both $Pmax_{rear}$ and $Pmax_{front}$ are tested under STC, Bifaciality Tolerance: ± 5 %

ELECTRICAL DATA | NMOT*

	Nominal Max. Power (Pmax)	Opt. Operating Voltage (Vmp)	Opt. Operating Current (Imp)	Open Circuit Voltage (Voc)	Short Circuit Current (Isc)
CS6W-520MB-AG	390 W	38.0 V	10.27 A	45.7 V	11.05 A
CS6W-525MB-AG	394 W	38.2 V	10.32 A	45.9 V	11.09 A
CS6W-530MB-AG	397 W	38.3 V	10.38 A	46.1 V	11.13 A
CS6W-535MB-AG	401 W	38.5 V	10.42 A	46.3 V	11.17 A
CS6W-540MB-AG	405 W	38.7 V	10.47 A	46.5 V	11.21 A
CS6W-545MB-AG	409 W	38.9 V	10.52 A	46.7 V	11.25 A

* Under Nominal Module Operating Temperature (NMOT), irradiance of 800 W/m² spectrum AM 1.5, ambient temperature 20°C, wind speed 1 m/s.

MECHANICAL DATA

Specification	Data
Cell Type	Mono-crystalline
Cell Arrangement	144 [2 x (12 x 6)]
Dimensions	2266 × 1134 × 35 mm (89.2 × 44.6 × 1.38 in)
Weight	32.2 kg (71.0 lbs)
Front Glass	2.0 mm heat strengthened glass with anti-reflective coating
Back Glass	2.0 mm heat strengthened glass
Frame	Anodized aluminium alloy
J-Box	IP68, 3 bypass diodes
Cable	4.0 mm² (IEC), 12 AWG (UL)
Cable Length (Including Connector)	410 mm (16.1 in) (+) / 290 mm (11.4 in) (-) or customized length*
Connector	T4 or MC4 series
Per Pallet	30 pieces
Per Container (40' HQ)	600 pieces or 540 pieces (only for US)

* For detailed information, please contact your local Canadian Solar sales and technical representatives.

TEMPERATURE CHARACTERISTICS

Specification	Data
Temperature Coefficient (Pmax)	-0.34 % / °C
Temperature Coefficient (Voc)	-0.26 % / °C
Temperature Coefficient (Isc)	0.05 % / °C
Nominal Module Operating Temperature	41 ± 3°C

PARTNER SECTION

* The specifications and key features contained in this datasheet may deviate slightly from our actual products due to the on-going innovation and product enhancement, CSI Solar Co., Ltd. reserves the right to make necessary adjustment to the information described herein at any time without further notice.
Please be kindly advised that PV modules should be handled and installed by qualified people who have professional skills and please carefully read the safety and installation instructions before using our PV modules.

1 - PV MODULE
SCALE: NTS

CPS — Datasheet

50/60 kW, 1000 Vdc String Inverters for North America

The 50 & 60 kW (55 & 66 kVA) medium-power CPS three-phase string inverters are designed for ground mount, large rooftop and carport applications. The units are high performance, advanced and reliable inverters designed specifically for the North American environment and grid. High efficiency at 98.8% peak and 98.5% CEC, wide operating voltages, broad temperature ranges and a NEMA Type 4X enclosure enable this inverter platform to operate at high performance across many applications.

The CPS 50/60KTL products ship with either the Standard Wire-box or the Rapid Shutdown Wire-box, each fully integrated and separable with touch-safe fusing, monitoring, and AC and DC disconnect switches. The integrated PLC transmitter in the Rapid Shutdown Wire-box enables PVRSS certified module-level rapid shutdown when used with the Tigo TS4-F/TS4-A-F/TS4-A-2F products, APS RSD-S-PLC/RSD-D products, and NEP PVG-2 products. The CPS FlexOM Gateway enables monitoring, controls and remote product upgrades.

CPS SCA50KTL-DO/US-480
CPS SCA60KTL-DO/US-480

Key Features

- NEC 2017/2020 PVRSS certified for rapid shutdown
- 55 & 66 kVA rating allows max rated active power @ ±0.91 PF
- Selectable max AC apparent power of 50/55 kVA and 60/66 kVA
- NEC compliant and UL listed arc-fault circuit protection
- 15-90° mounting orientation for low profile roof installs
- Optional FlexOM Gateway enables remote firmware upgrades
- Integrated AC and DC disconnect switches
- 3 MPPTs with 5 inputs each for maximum flexibility
- NEMA Type 4X outdoor rated enclosure
- UL 1741-SA certified to CA Rule 21, including SA8 - SA18
- UL 1741-SB and IEEE 1547-2018 certified
- Separable wire-box design for fast service
- Standard 10-year warranty with extensions up to 20 years

50/60KTL Standard Wire-box

50/60KTL Rapid Shutdown Wire-box

This device complies with part 15 of the FC Rules

Chint Power Systems America
1380 Presidential Drive, Suite 100, Richardson, TX 75081
Tel: 855-584-7168 Mail: AmericaSales@chintpower.com Web: www.chintpowersystems.com

CPS — Technical Data

Model Name	CPS SCA50KTL-DO/US-480	CPS SCA60KTL-DO/US-480
DC Input		
Max. PV power	90 kW (33 kW per MPPT)	
Max. DC input voltage	1000 Vdc	
Operating DC input voltage range	200-950 Vdc	
Start-up DC input voltage / power	330 V / 80 W	
Number of MPP trackers	3	
MPPT voltage range @ PF=0.99	480-850 Vdc	540-850 Vdc
Max. PV short-circuit current (Isc x 1.25)	204 A (68 A per MPPT)	
Number of DC inputs	15 inputs, 5 per MPPT	
DC disconnection type	Load-rated DC switch	
DC surge protection	Type II MOV	
AC Output		
Rated AC output power @ PF>0.99 to ±0.91[1]	50 kW	60 kW
Max. AC apparent power (selectable)	50 / 55 kVA	60 / 66 kVA
Rated output voltage	480 Vac	
Output voltage range[2]	422 - 528 Vac	
Grid connection type	3Φ / PE / N (Neutral optional)	
Max. AC output current @ 480 Vac	60.2 / 66.2 A	72.2 / 79.4 A
Rated output frequency	60 Hz	
Output frequency range[2]	57 - 63 Hz	
Power factor	>0.99 (±0.8 adjustable)	
Current THD @ rated load	<3%	
Max. fault current contribution (1 cycle RMS)	64.1 A (1.06/0.88 PU)	
Max. OCPD rating	110 A	125 A
AC disconnection type	Load-break rated AC switch	
AC surge protection	Type II MOV	
System and Performance		
Topology	Transformerless	
Max. efficiency	98.8%	
CEC efficiency	98.5%	
Stand-by / night consumption	<1 W	
Environment		
Enclosure protection degree	NEMA Type 4X	
Cooling method	Variable speed cooling fans	
Operating temperature range[3]	-22°F to +140°F / -30°C to +60°C	
Non-operating temperature range[4]	No low temp minimum to +158°F / +70°C maximum	
Operating humidity	0 to 100%	
Operating altitude	13123 ft / 4000 m (derating from 9843 ft / 3000 m)	
Audible noise	<60 dBA @ 1 m and 25°C	
Display and Communication		
User interface and display	LCD+LED	
Inverter monitoring	SunSpec, Modbus RS485	
Site-level monitoring	CPS FlexOM Gateway (1 per 32 inverters)	
Modbus data mapping	CPS	
Remote diagnostics / firmware upgrade functions	Standard / (with FlexOM Gateway)	
Mechanical		
Dimensions (H x W x D)	39.4 x 23.6 x 10.24 in (1000 x 600 x 260 mm)	
Weight	Inverter: 123.5 lbs (56 kg); Wire-box: 33 lbs (15 kg)	
Mounting / installation angle[5]	15 to 90 degrees from horizontal (vertical or angled)	
AC termination	M8 stud type terminal block (wire range: #6 - 3/0 AWG CU/AL; lugs not supplied)	
DC termination[6]	Screw clamp, neg. busbar (RSD version[6]) wire range: #14 - #6 AWG CU	
Fused string inputs (5 per MPPT)[7]	RSD[8] and Standard Wire-box: 20 A fuses provided (fuse values up to 30 A acceptable)	
Safety		
Certifications and standards	UL 1741-SA/SB Ed. 3, UL 1699B, UL 1998, CSA-C22.2 NO.107.1-01, IEEE 1547-2018, FCC PART15	
Selectable grid standard	IEEE 1547a-2014, IEEE1547-2018[8], CA Rule 21, ISO-NE, HECO	
Smart-grid features	Volt-RideThru, Freq-RideThru, Ramp-Rate, Specified-PF, Volt-VAR, Freq-Watt, Volt-Watt	
Warranty		
Standard	10 years	
Extended terms	15 and 20 years	

1) Active power derating begins at PF = ±0.91 to ±0.80 when max AC apparent power is set to 55 or 66 kVA.
2) The "output voltage range" and "output frequency range" may differ according to the specific grid standard.
3) Active power derating begins at 40°C when PF = ±0.9 and MPPTx Vmin; at 45°C when PF = 1 and MPPTx Vmin; and at 50°C when PF = 1 and MPPTx 700 Vdc.
4) See user manual for further requirements regarding non-operating conditions.
5) Shade cover accessory required for installation angles of 75 degrees or less.
6) RSD wire-box only includes fuses and fuse holders on the positive polarity, compliant with NEC 2017/2020.
7) Fuse values above 20 A have additional spacing requirements or require the use of the Y-Comb Terminal Block. See user manual for more details.
8) Firmware version 17.0 or later required.

2 - PV INVERTER
SCALE: NTS

SYSTEM HOST

MALAGA COUNTY WATER DISTRICT — SERVING HOME AND INDUSTRY

3580 S. FRANK ST
FRESNO, CA 93725
559-485-7353

SYSTEM DEVELOPER

sitelogiQ

1512 SILICA AVE
SACRAMENTO, CA 95815
916-988-8808

ELECTRICAL CONSTRUCTORS AND ENGINEERS

BLYMYER ENGINEERS

1101 MARINA VILLAGE PKWY
ALAMEDA, CA 94501
510-521-3773

STRUCTURAL ENGINEERING AND STEEL CONSTRUCT

TEICHERT SOLAR

10620 TREENA STREET, STE 140
SAN DIEGO, CA 92131
562-283-2970

ARCHITECT OF RECORD

M M P V d e s i g n

Mariana Moncada, Architect
718 West Arbor Drive
San Diego, CA 92103
619.632.2883

ARCHITECT / ENGINEER OF RECORD

NOT FOR CONSTRUCTION

PROJECT

MALAGA CWD - WATER TREATMENT PLANT

3749 S MAPLE AVE
FRESNO, CA 93725

NO.	REVISION	DATE

DATE: 07.14.23

SHEET TITLE

EQUIPMENT DATASHEETS

SHEET NO.:

E-10.0